Operator's manual

applies to "Plus", "Spider" and "Twister" trikes

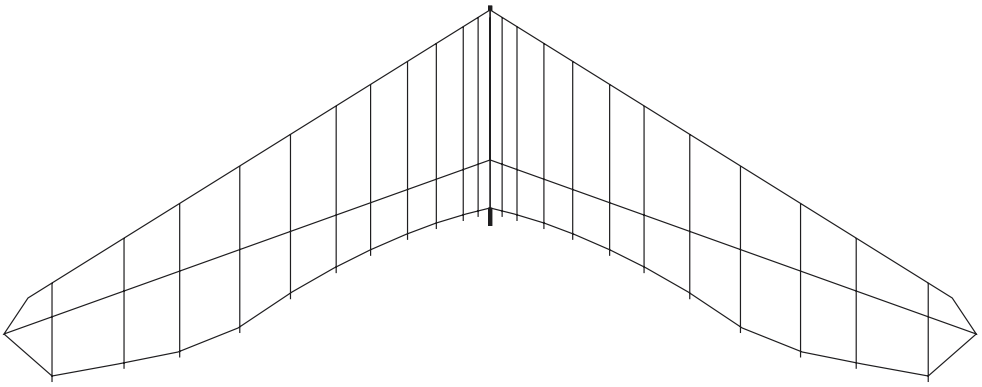

updated in July, 2006

This is the original manual of Pipistrel d.o.o.
Should third-party translations to other languages contain any inconsistencies, Pipistrel d.o.o. denies all responsibility.

WARNING!

As this manual applies to all models of trikes it is mandatory to designate those specific parts of this manual that regard the aircraft you own.

This booklet MUST be present inside the cockpit at all times!
Should you be selling the aircraft make sure this manual is handed over to the new owner.

Trike model:

Serial number:

Date of production:

Aircraft emtpy weight (kg):

Available fuel weight (kg):

Available cargo weight (kg):

Installed appliances included in aircraft empty weight:

Date and place of issue: **Ajdovščina,**

Index of revisions

Enter and sign the list of revised pages in the manual into the spaces provided below. All revised pages should be clearly designated in the upper right corner of the page, also, any changes in page content should be clearly visible (e.g. marked with a bold vertical line)

Name of revision	Rev.no., date:	Signature, date:	Description:

List of valid pages

This manual contains _____ original and revised pages listed below.

	Pages	State:
Cover		**Original**
Page numbering		**Original**
Index of revised pages	3	**Original**
List of valid pages	4	**Original**
Table of contents	5	**Original**
General	7 - 9	**Original**
Limitations	11 - 17	**Original**
Emergency procedures	19 - 22	**Original**
Normal procedures	23 - 36	**Original**
Performance	37 - 45	**Original**
Weight and balance	47 - 49	**Original**
Aircraft and systems on board	51 - 64	**Original**
Handling and maintenance	65 - 73	**Original**
Appendix	75 - 103	**Original**

Caution:

This manual is valid only if it contains all of the original and revised pages listed above.

Each page to be revised must be removed, shredded and later replaced with the new, revised page in the exact same place in the manual.

Table of contents

This page is intentionally left blank.

General

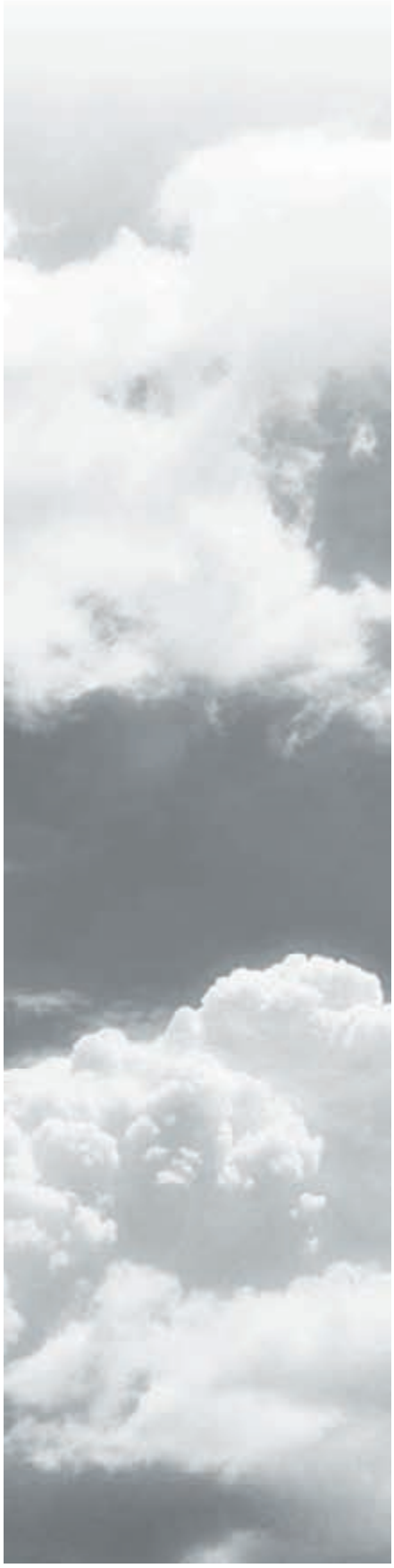

Introduction

This manual contains all information needed for appropriate and safe use of trikes

IT IS MANDATORY TO CAREFULLY STUDY THIS MANUAL PRIOR TO USE OF AIRCRAFT

In case of aircraft damage or people injury resulting form disobeying instructions in the manual PIPISTREL d.o.o. Ajdovscina denies all responsibility.

Certification basis

PIPISTREL d.o.o Ajdovscina possesses the manufacturing licence issued by URSZP (ULN no.: P-03) for Trikes.

Trikes are certified at URSZP according to the standards of the Republic of Slovenia and the Type Certificate.

Notes and remarks

Safety definitions used in the manual:

WARNING! Disregarding the following instructions leads to severe deterioration of flight safety and hazardous situations, including such resulting in injury and loss of life.

CAUTION! Disregarding the following instructions leads to serious deterioration of flight safety.

Technical data & 3-view drawing

TRIKE	Plus	Spider	Twister
seats	2	2	2
height	3,56 m	3,56 m	3,56 m
length	2,5 m	2,5 m	2,5 m
standard engine	Rotax 503	Rotax 582	Rotax 912
engine power	39,5 kW (53 HP)	47,7 kW (64 HP)	59,7 kW (80 HP)
propeller	ground adjustable 2-blade composite	ground adjustable 4-blade composite	ground adjustable 3-blade composite
trike empty weight (excl. wing)	93 kg (205 lbs)	105 kg (231 lbs)	120 kg (264 lbs)
fuel reservoir capacity	43 l (11 gal)	43 l (11 gal)	43 l (11 gal)
rescue parachute mount	no	yes	yes

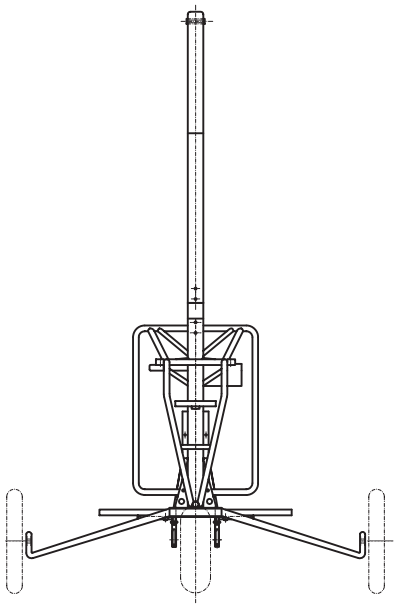

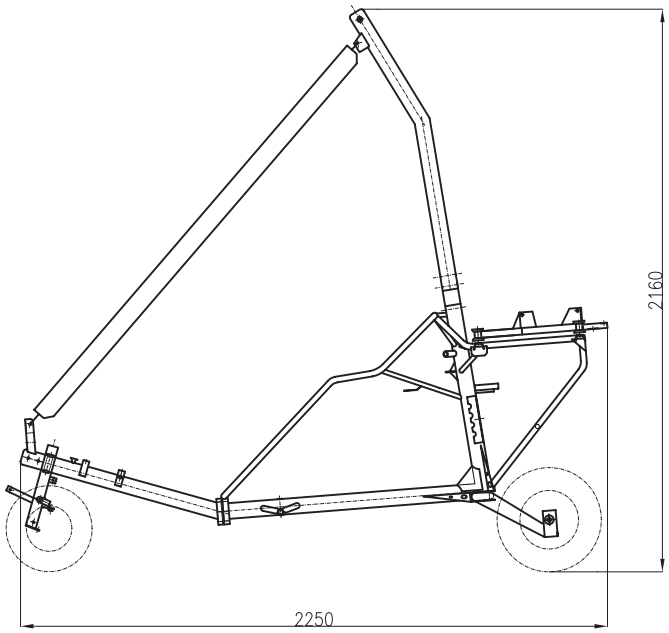

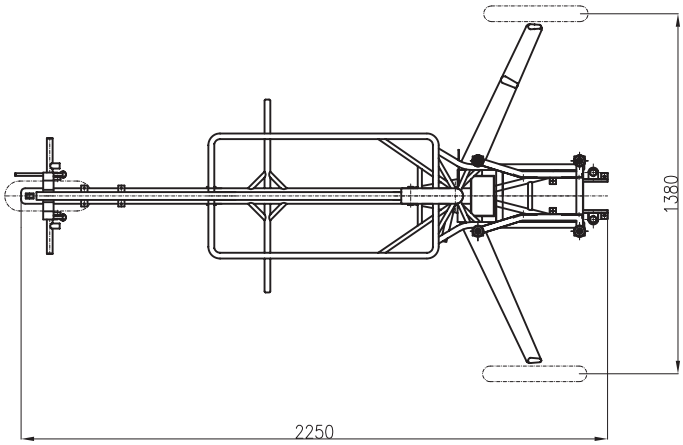

Wing

Hazzard 15 and Hazzard 12 by Sirio are wings made of alluminium alloy Erghal, which has a stiffness close to steel. The wing fabric is a combination of Trilam and reinforced Dacron materials.
Both wings are exceptionally stiff and do not degrade in quality of geometry during time. Both wings are UV resistant, but the fabric is to be replaced after a prolonged period of time if porosity is noticed.
Trilam and Dacron fabric are not sensitive to wrinkles, therfore the wing has a virtually infinite life.

Wing technical data

WING	Hazzard 15	Hazzard 12
wing area	15 m^2	12,5 m^2
weight	48 kg	52 kg
wing-span	10,2 m	10,5 m
vitkost	6,84	7,2
number of ribs	34	40
tubular spars	Erghal	Erghal
wire ropes	plastic coated anti-rust metal	plastic coated anti-rust metal
wing fabric	Trilam, re. Dacron	Trilam, re. Dacron

Limitations

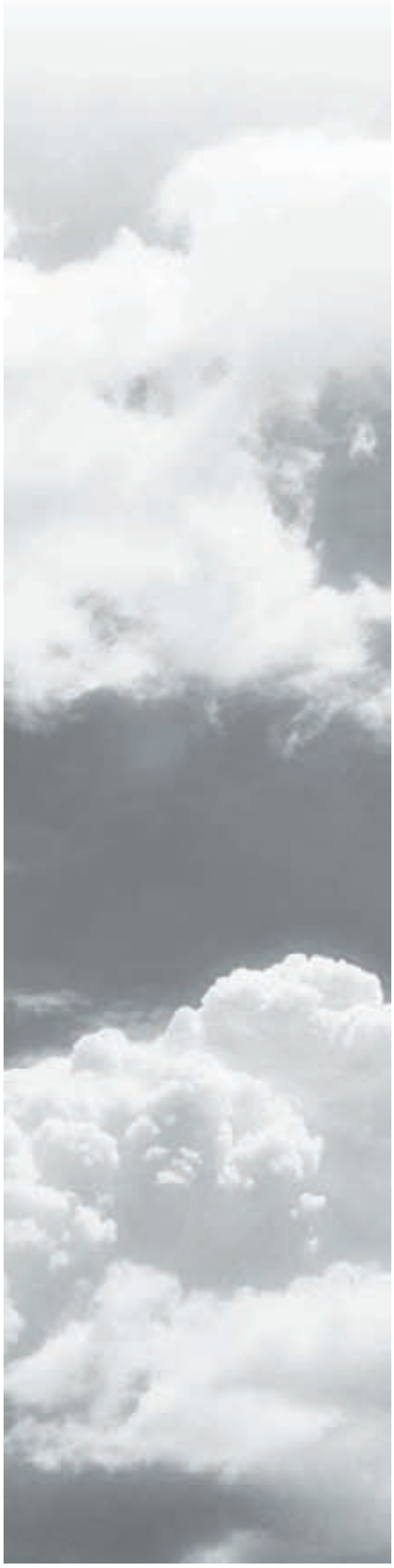

Introduction

This chapter provides information about operational restrictions, instrument markings and basic knowledge on safe operation of aircraft, engine and on-board appliances.

Operational velocities

Speed limits

	Velocity	Hazzard 15M IAS [km/h (kts)]	Hazzard 12M IAS [km/h (kts)]	Remarks
Vmax	Maximum permitted horizontal speed	**70 (38)**	**80 (43)**	Never exceed this speed in horizontal flight. When flying close to the Vmax never use more than one third of controls' deflecions.
VNE	Velocity never to be exceeded	**100 (54)**	**120 (65)**	Never exceed this speed. Should the VNE be exceeded, land as soon as possible and have the aircraft verified for airworthiness by authorised service personnel.
VA	Manoeuvering velocity	**80 (43)**	**80 (43)**	Below this speed, at full triangle forward, the wing will stall before reaching maximum permitted load.
V_{s0}	Stall speed	**47 (25)**	**50 (27)**	Flight below this airspeed may result in complete stall and loss of control over aircraft.

Oznake na merilniku hitrosti

MARKING	IAS [km/h (kts)]	definition
green arc	**- 80 (- 43)**	Range of normal operation. Upper limit is VA.
yellow arc	**80 - 120 (43 - 65)**	Manouvre the aircraft with great caution in calm air only.
red line	**120 (65)**	Maximum permitted airspeed

Engine, fuel, oil

Engine manufacturer: ROTAX
Engine types: ROTAX 503, ROTAX 582, ROTAX 912

The engine

TEMPERATURE °C / ROTAX ENGINE	503 UL	582 UL	912 UL
cylinder head temp. (CHT); min., work, highest	100; 200; 250	110; 130; 150	80; 110; 150
max. CHT difference	20	10	/
exhaust gas temp. (EGT); normal, max.	460-580; 650	500-620; 650	650-800; 900
max. EGT difference	25	25	30
air intake temp. (AIR); highest	40	40	40
cooling fluids temp. (WATER); min., highest	/	50; 80	50; 110
oils temp. (OIL TEMP); min., normal, highest	/		50; 90-110; 140
RPM, PRESSURE	**503 UL**	**582 UL**	**912 UL**
oil pressure (OIL PRESS); lowest, highest	/	/	0,2; 6,0
engine revolutions (RPM); on ground recom.	6400	6100	5500
RPM on ground; max. allowable	6800	6800	5800
magneto check at (RPM)	3500	3500	4000
max. single magneto drop (RPM)	200	200	300

Fuel and oil

ROTAX ENGINE	503 UL	582 UL	912 UL
recommended fuel	leaded or unleaded super	leaded or unleaded super	unleaded super
fuel to be discouraged from using	everything under AKI 87	everything under AKI 87	leaded* or 100LL*
recommended oil	super 2-stroke API-TC	super 2-stroke API-TC	API SJ SAE 10W-50

***Engine life is reduced. Should you be forced to used this kind of fuel, change of engine oil every 50 flight hours is crucial. Please consult the manufacturer on which type of oil to use.**

IMPORTANT!
Two-stroke engines should be powered only by fuel complying with MON 83 (or higher) or RON 90 (or higher) classification. As for mixing fuel and oil manually, it is best to use recommended oil (see above). Dedicated lead additives should not be used (see detailed instructions in the engine manual).

MIXING RATIO: 50 UNITS of FUEL and 1 UNIT of OIL (e.g. 2 dl of oil every 10 litres of fuel)

When using engines equipped with oil injection pump it is vital to monitor the oil level in its container. There should always be enough oil to suffice for the intended flight duration, including reserve. Four-stroke engines should only be powered by unleaded fuel, for lead sedimentation inside the engine shortens its life. Provided you are unable to use unleaded fuel, make sure engine oil and the oil filter are replaced every 50 flight hours.

Propeller

TRIKE	Plus	Spider	Twister
standard propeler	Pipistrel BAM 2	Pipistrel BAM 2	Pipistrel BAM 2
option	Pipistrel VARIO	Pipistrel VARIO	Pipistrel VARIO

Engine instrument markings

WARNING: fill in engine specific values.

Instrument	Red line (minimum)	Green arc (normal)	Yellow arc (caution)	Red line (maximum)
Tachometer (RPM)				
Oil temperature				
Cylinder head temp.				
Oil pressure				
Fuel quantity				

Weight limits

Standard model empty weights:

WEIGHT	Plus	Spider	Twister
aircraft emtpy weight (excl. wing)	93 kg	105 kg	120 kg
maximum take-off weight (MTOW)	350 kg	350 kg	350 kg
fuel capacity	43 l	43 l	43
max. fuel weight allowable	32,7 kg	32,7 kg	32,7 kg
minimum crew weight	no limit	no limit	no limit

Manoeuvre limits

All manoeuvres must be performed within allowable airspeed limits. The aircraft is certified as an ultralight aircraft.

Following NON-aerobatic manoeuvres are permitted as defined:

- Steep turn (max. 60° bank with single pilot, max. 45° with 2 pilots)
- Power on and off stalls not below 150 meters (500 feet) above ground level.

G-load factors

max. positive wing load: + 4 G
max. negative wing load: – 2 G

Cockpit crew

- There is NO LIMIT to the minimum cockpit crew weight.
- Maximum takeoff weight (MTOM) MUST NOT, under any circumstances, exceed 350 kg.

Types of operations

Powered hang-gliders are built to fly under daylight visual flight rules (day VFR) in zero icing conditions.

Minimum equipment list

- Airspeed indicator
- Altimeter
- Compass

Other restrictions

Due to flight safety reasons it is forbidden to:

- fly in heavy rainfalls;
- fly during thunderstorm activity;
- fly in a blizzard;
- fly according to instrumental flight rules (IFR) or attempt to fly in zero visibility conditions (IMC);
- fly when outside air temperature (OAT) reaches 40°C or higher;
- perform any form of aerobatic flying;

Warning placecards

Powered hang-gliders are categorised as an Ultralight aircraft and must wear a warning placecard as such. The placecard indicates the aircraft was not built according to the ICAO standards and is therefore flown completely at pilot's own risk.

Emergency procedures

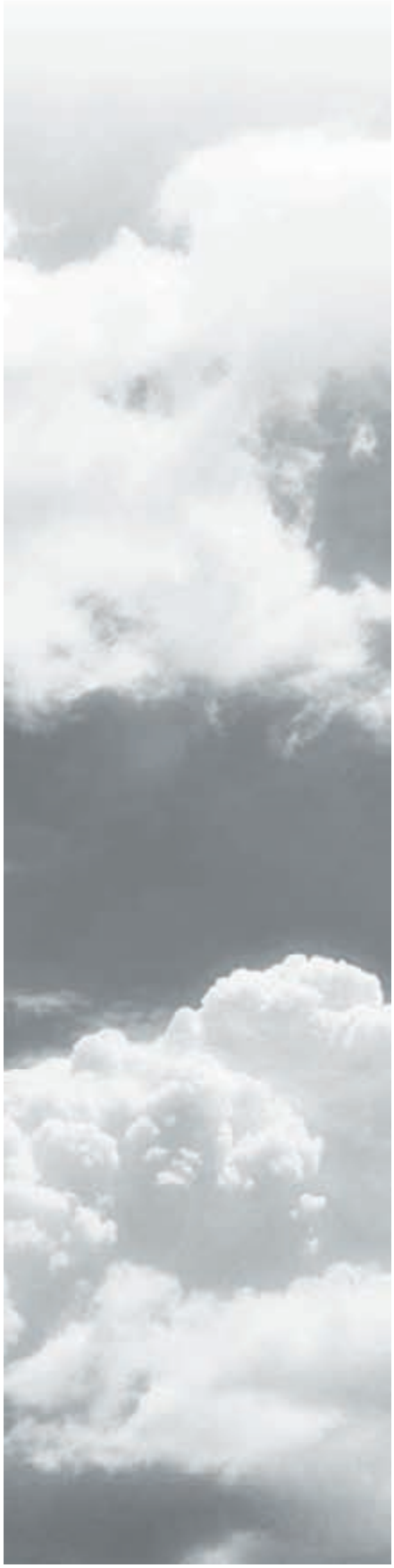

Introduction

This chapter provides information on how to react when confronted with typical flight hazards.

Pre-stall flight

The powered-hangglider typically begins to stall at airspeeds below 50 km/h (27 kts) , depending on the current weight. The powered-hangglider is constructed and built in such a manner that a pilot cannot maneuvre the aircraft into a deep stall where the aircraft would drop the nose and start to loose height rapidly.

Pre-stall with engine idle or off

Even if the triangle is completely pushed forward the powered-hangglider still remains flyable, but looses height relatively fast. Under such conditions the airspeed stabilises at about 45 km/h (24 kts) and the vertical sink at about 3 m/s (600 fpm). The powered-hangglider is rather unstable and the pilot should constantly correct eventual bank deviations using gentle, non sudden movements. Should you attempt to perform pre-stall flight in a slightly banked curve you shoud know the performance is rather the same. However, at banks exceeding 20° the nose drops significantly.

Pre-stall under power

With the triangle pushed completely forward and full throttle the powered-hangglider begins to climb and remains under full control authority. At banks over 40° the nose will drop significantly.

Stall

If the powered-hangglider stalled while in a banked turn, first set the triangle to neutral position, then pull the bar towards yourself to ensure proper airspeed.

If the powered-hangglider stalled in straight flight for whatever reson, it is enough to pull the triangle towards yourself to ensure proper airspeed and then reinitiate horizontal flight by pushing the bar slightly forward.
This maneouvre must be performed gently, since the airspeed may inscrease greatly during a prolonged recovery phased. The airspeed may be so high that a sudden push of bar may result in a look or inverted flight. This causes the trike to fall into the wing and concequentially in-flight break-up of the aircraft.

WARNING! During final recovery phase the movements of the triangle must be gently, as the airspeed may be very high. Special attention must be payed not to exceed the maximum permitted speed (VNE) and/or maximum g-load factors.

After reinitiating horizontal attitude, add throttle and continue flight.

Engine failure

Engine failure on take-off

Ensure proper airspeed first (triangle back)! Land while maintaining runway heading and avoid eventual obstacles. Master switch to "OFF".

WARNING! IF NOT ABSOLUTELY NECESSARY, DO NOT CHANGE YOUR COURSE AND DO NOT MAKE ANY TURNS!
After having landed ensure proper safety to the aircraft and remove it from the runway not to obstruct other air traffic (if possible).

Engine failure en-route

Ensure proper airspee first (triangle back), anayise the terrain underneath and choose one most sutable for landing out.

WARNING! The decision where to land when landing out is FINAL! DO NOT change your mind even if you happen to come across a different, perhaps more appropriate landing site.

Provided there is enough height, react as follows:

Make sure the master switch is in the ON position (key full right) and magneto switches both set to ON.
Should the propeller not be spinning (motor blocked!), the engine is probably seriously damaged. In this case DO NOT attempt to restart the engine. Instead, begin with the landing out procedure immediately.
Should the propeller be spinned by air current freely, fuel or electrical system is probably malfunctioning. Verify on-board fuel quantity and make sure both magneto switches are set to ON.
Restart the engine.

Emergency landing out

1. Master switch OFF (key in full left position).
2. Approach and land with extreme caution, maintaining proper airspeed.
3. After having landed abandon the aircraft immediately.

The landing out manoeuvre MUST be preformed with regard to all normal flight parameters.

Engine fire

Engine fire on ground

This phenomenon is very rare in the field of Ultralight aviation. However, coming across engine fire on ground, react as follows:

1. Come to a full-stop, engage starter and set throttle to full power.
2. Master switch OFF immediately after the engine has stopped.
3. Abandon the aircraft and start fire extinguishing.

WARNING! After the fire has been extinguished DO NOT attempt to restart the engine.

Engine fire in flight

2. Set power to full (throttle lever in full forward position).
3. Disconnect the battery from the circuit (pull battery disc. ring on the switch column)
4. Close all windows and set all ventilation devices to OFF.
5. Perform side-slip (crab) manoeuvre in direction opposite the fire.
6. Perform emergency landing out procedure.

Electrical cable fire

Spreading smoke is most definitely a concequence of electrical cables overheating due to a short circuit. Should you encounter this phenomenon:

Set master switch to I position, which disconnects all of the electrical system (also instruments) from the circuit, except for the engine. As engine continues to function normally, plan and perform landing as soon as possible.

Carburator icing

First noticable signs of carburator icing are loud engine noises and gradual loss of power.

Carburator icing may occur even at temperatures as high as 10°C, provided the air humidity is increased.
One should know that aircrafts equipped with two-stroke engines, powered by fuel and oil mixture, hardly ever suffer from carburator icing phenomenon. However, the probability of carburator icing is increased by planes equipped with two-stroke engines using a separate oil injection unit and four-stroke engines.

Should you be suspecting carburator icing to take place, descent immediately!
In case of complete power loss perform emergency landing out procedure.

Exceeding VNE

Should the VNE be exceeded, reduce airspeed slowly and continue flying using gentle control deflections. Land safely as soon as possible and have the aircraft verified for airworthiness by authorised service personnel.

Normal procedures

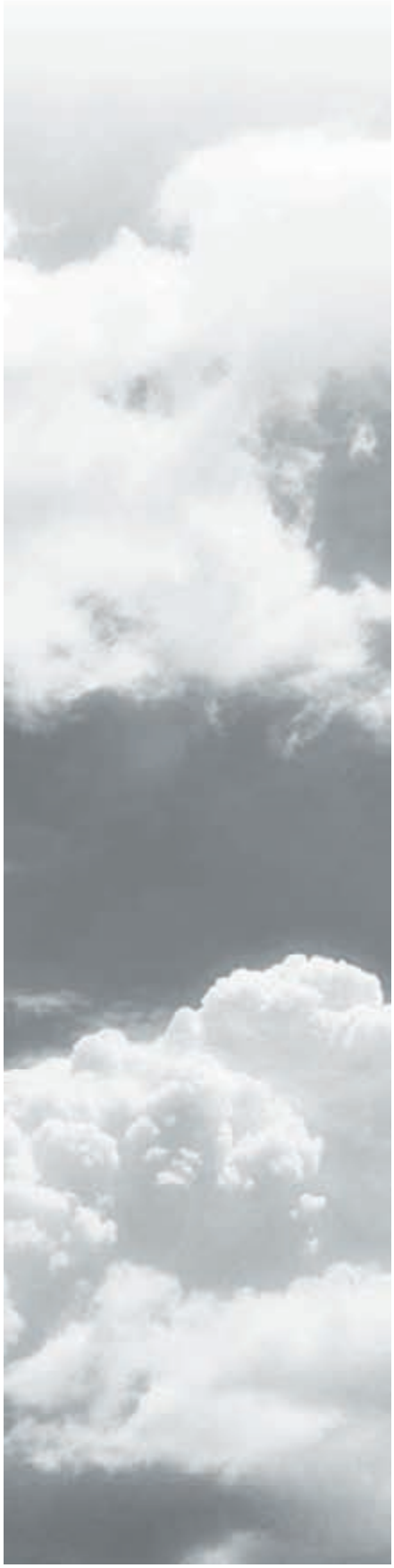

Introduction

This chapter provides information on everything needed to fly the trike safely.

Assembling the powered-hangglider

WARNING! The wing MUST be assembled only by the pilot himself! The help of friends should be limited only to lifting the wing at the beginning and at the end of the assembly. All other help, intentional or unintetnional may lead to a future accident for reasons of imperfect communication to the pilot or insufficient knowledge of the helpers.

Assembling the Hazzard wing(s)

After you arrive at the airfield find an open space on low grass. Do not attempt to start assembling the wing on ashpalt or other hard surface as you will damage the outer wing fabric.

Place the wing pouch on the ground so that the zipper is facing upwards. Unzip the zipper fully and take out both bags with ribs, the nose cap and control tube.

In case the wing was packed "short" first undo the fabric so that the leading edge becomes straight. Take the extender of the side tube out of the bag and place it onto the tube while pressing the button on the tube itself. Note the markings on the extender (LEFT-Sinistra, RIGHT-Destra) .

Rotate the tube until the buttom jams into position. Insert the swivel (conical tube, perpendicular to the side strut of the wing) and bring the plastic reinforced strap over the tube so, that the semi-circle sits in the tube's groove. Do the same for the other side of the wing.

Now assemble the triangle. Remove the protective straps and protective foam, then take the side oval tubes apart and mate them with the control bottom tube.

Insert the alluminium sockets on the side tubes to the control tube. To secure the triangle push the push-pin through the holes while pressing the button on the push-pin. cure the triangle. Also, don't forget to add the safety washer on the other side before releasing the button. After button release, the push-pin is securely in position and cannot be removed.

With a help of a friend then turn the wing over so that it lies with the triangle on the ground. Spread the wingtips slightly and pay attention not to cross-over the wire ropes.

Lift the top pyramide strut and place it into its bushing. Spread the wingtips even more and take the ribs for one side of the wing out of the bag. Separate the straight ribs from the curved ribs now.

Take one, whichever rib, into your hand and determine which side the top plastic part is bent to. This will tell you to which side of the wing the rib belongs. To spare this job simply follow the colour of the middle section ribs, which are usually left inside the wing at all times.

Sort the ribs by size and place it by the adequate opening at the back side of the wing. Do this for both wing halfs. Then start inserting the ribs, starting at the middle and working your way towards the wingtips. Insert the ribs with utmost care not to damage the fabric and stitches at the rib-pockets.

After you have insterted all the ribs, secure them with rope-loops. Do this by using the enclosed tool. Having completed this with all the ribs, go ato the nose of the wing and fasten the nose rib and bring into its position. Then go to the back side of the wing again and fasten the upper tubes on the middle tubes and secure them with a push-pin and washer.

The wing is now ready to be lifted. You will need some help to do this. Have a friend stand at the back of the middle tube, while you stand at the front. Grab the tube and lift it at the same time.
As the wing has been lifted so high, that the back wire ropes of the triangle become tight, the pilot fastenes the front wire ropes to their attaching point at the front tube and secures them with a push-pin and washer. You will need quite some force to do this!

Place a nose cap into its position onto the velcro stripes. You may now place the wing onto the ground again with its wingtips facing upwards (sitting on the nose).

Insert the ribs on the bottom side of the wing as well while paying attention to the paint. Make sure, the bottom ribs are whole in the pockets, only the loops for removal may be sticking out.

Push the swivels at the wingtips into their position and make sure they are inserted all the way. Use your other hand to move the fabric out of your eyesight.

The only two ribs left should be the radial ribs at the wingtips. Insert them so that the shorter straight sections come into the pocket. Then secure them with the rope loos as with all other wing ribs.

For Hazzard 12 insert the round flatsheet metal into the wing-tip and fasten them with rivets. The last two ribs and the radial ribs have a built-in spring. When installing, push the rib into the pocket, press on the spring and push the push-pin into the hole in the flat-sheet metal.

The wing is now fully assembled. Do verify if everything is as it should be, especially that the ribs are secured with rope-loops which must not interfeer with the ropes which connect the wing to the pyramid. If this happenes the powered hangglider will be drifting of course.

2-view wing drawing

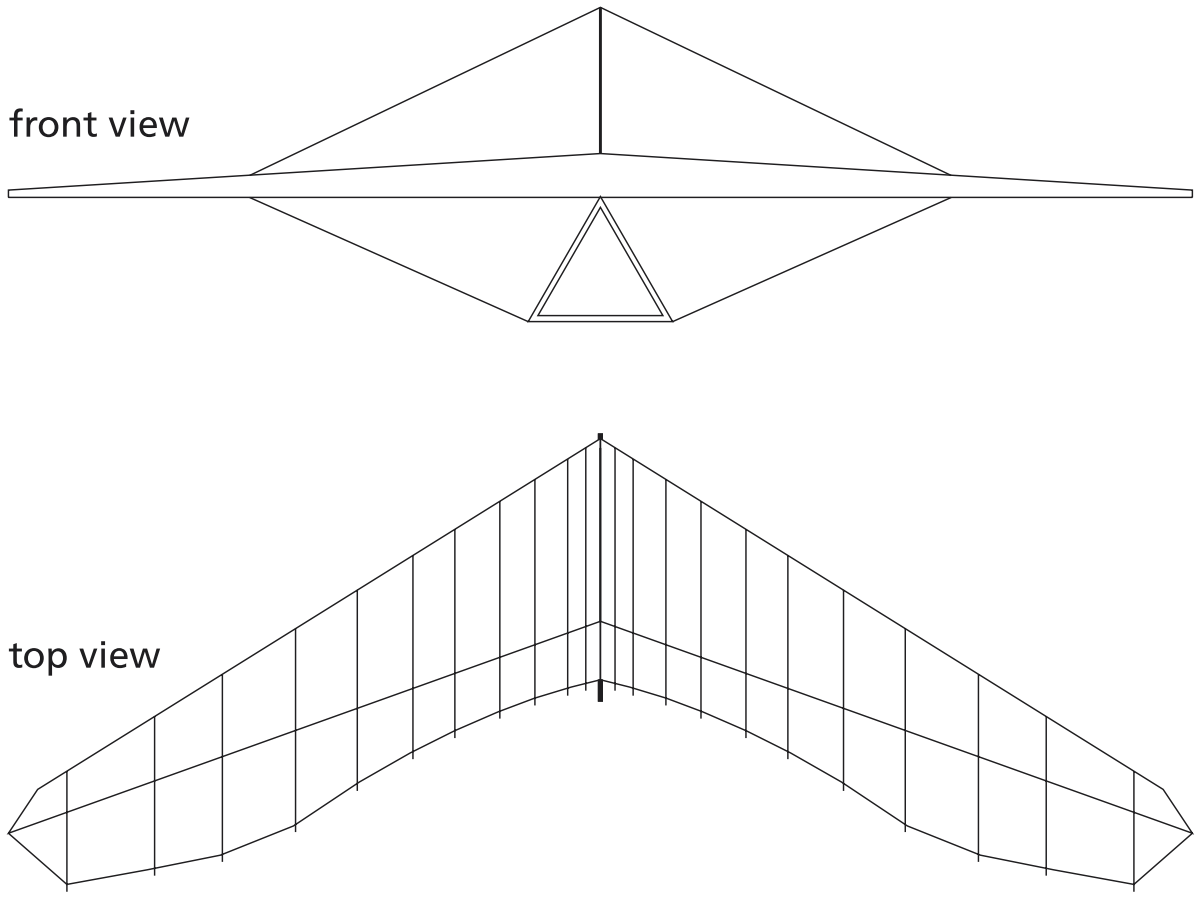

Assembling the trike

At the trike side, first unwrap the main tube, which is usuallly secured to the instrument bubble with foam for transportation. Remove the safety pins and bolts from the wing attachement joint. Remove the top part of the joint, which you then place between the spacers on the middle main spar of the wing.

Bring the trike to the wing, which is left tipping on the nose. This way you can drive the trike below the wing (front wheel goes over the triangle).

Free the securing pin on the comb-joint on the upper strut of the trike and lift it to attach the wing to the trike. Make sure that the plastic parts of the joint, which you previously placed onto the middle spar of the wing, sits nicely between the alluminium plates.

Insert the bolts into the plastic attachement joint and secure them with pins. What follows is lifting the wing into its final position. This is easiest to do with a help of a friend, who holds the trike in position with one hand and has a safety-pin for the comb-joint ready in his other hand. You should now lift the nose of the wing so high, the comb joint allignes and the helper can insert the bolt into the comb joint. After that you may release the wing. Apply the safety lock to the comb joint and install the antistall tube.

The joint between the wing and the trike must be additionally secured with a rope loop. When installing the safety loop make sure that you lead it over the main middle strut of the wing and below the point where the antistall is attached to the trike.

Now remove the propeller covers and the powered-hangglider is ready for the preflight check-up.

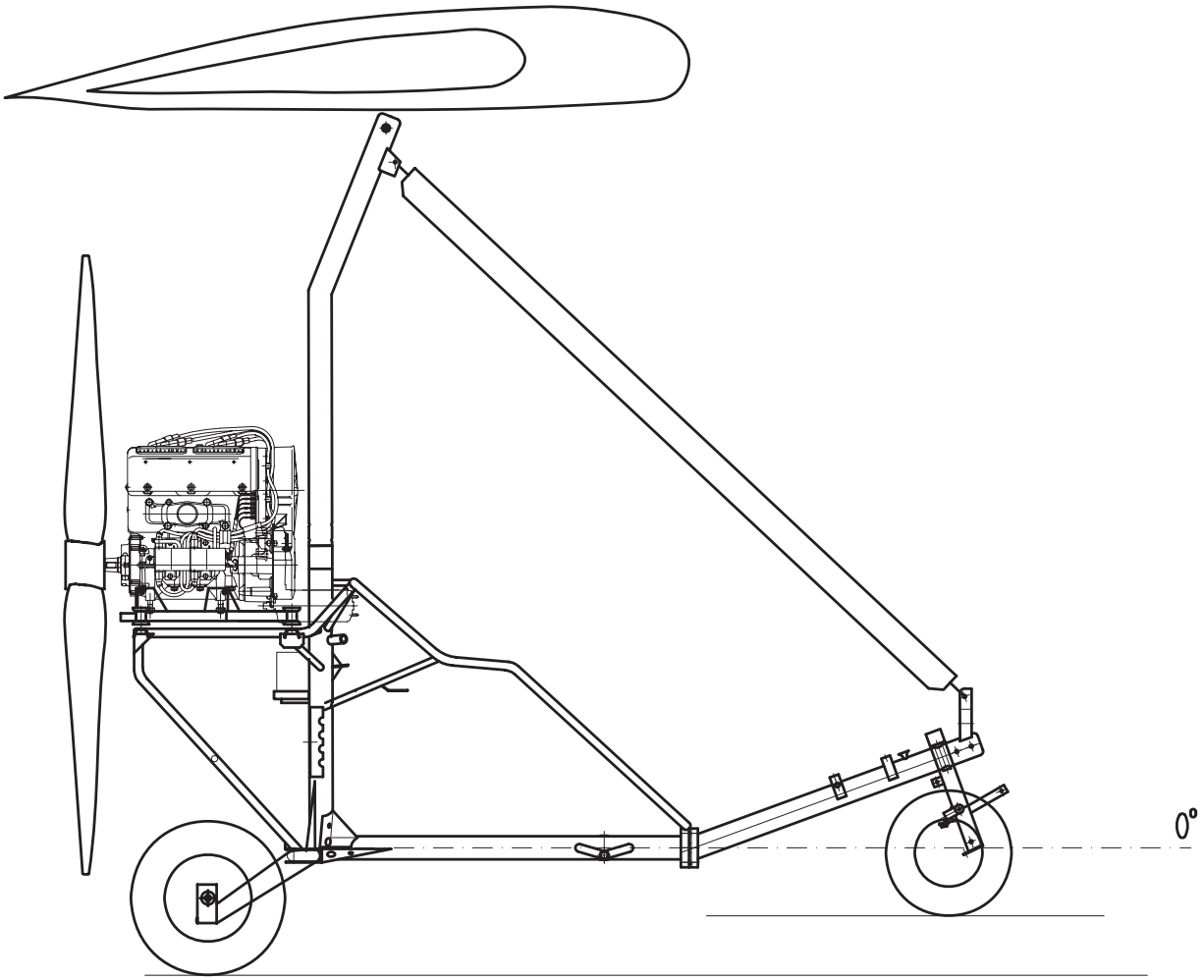

Daily check-up

The daily check-up matches the preflight check-up.

Preflight check-up

WARNING! Every single check-up mentioned in this chapter must be performed prior to EVERY FLIGHT, regardless of when the previous flight took place!

The person responsible for the preflight check-up is the pilot from whom it is required to perform the check-up in the utmost thorough and precise manner.

Provided the status of any of the parts and/or operations does not comply with conditions stated in this chapter, the damage MUST be repaired prior to engine start-up. Disobeying this instructions may result in serious further damage to the plane and crew, including injury and loss of life!

Conducting the preflight check-up

Always perform the prefligtht check-up beginning and ending in the same position while walking all around the powered-hangglider in-between. Always perform the preflight check-up immediately before the flight itself.

Wing

Begin the check-up at the tip of the wing, where the front triangle wire ropes meet the middle main spar. Verify that the pusk-pin is secured properly and run your hand over the wire ropes in both directios. This simple test will show whether any of the wire ropes is imperfect or even thorn. In this case a small wire will pinch your finger. Next check all the linkage of the triangle, all rope-loops at the ribs and the attachement joint between the wing and the trike. Do not forget to check the safety loop between the wing and the trike.

Again, make sure that the swivels are in position. At the wingtips look inside the wing and make sure that no stuts (tubes) show abnormalities, open the zippers at the side ripes and under the middle main spar. Check everything you can see. Then close the zippers again. Make sure that the top pyramide ropes are not interfeering with the ribs' rope-loops and check the push-pin at the top side of the middle main spar.

Undo the main zipper, check the connection between the wing's spar and tightening straps. Touch the middle main spar exactly below the point where the main wing's spar floats on top. There must be a couple of centimeters between the middle main spar and wing's spar, otherwise the bolts of the wing's spar may begin to grind and cut throught the middle main spar, which definitely leeds to an serious accident. Should the wing's spar be lower than required, you may suspect the top pyramide ropes are prolonged, which is usually a direct concequence of rough landings. In this case the top pyramide ropes MUST be replaced.

Trike

Check all the joints to verify there is no or very little free-play. Check the bolts, especially main engine and engine mount bolts to make sure they are fastened. Check all safety lock at locking pins and the seat belts. Tyre pressure must be 1,2 bar. Inspect the tubes and wheelbase visually as well. Check all the welds, the main bolt of the front wheel, the fuel filter and the reservoir.

Engine

Check all the mount and engine bolts, rubber shock absorbers, exhaust springs, electrical wiring, fuel lining and the level of oil and cooling fluid with Rotax 582 and 912.
Make sure that the caps of spark plugs are firmly attached in position. Check the fuel quantity on board and verify there is oil in the fuel (mixture) for 2-stroke engines (Rotax 503, 582)

Propeller

Pay special attention to mechanical damage to the blades, eventual crack, dents or other abnormalities on the surface. Verify that the attachment bolts and the propeller flange are in perfect condition.

Normal procedures and recommended speeds

Engine start-up

Before engine start-up

CAUTION! To ensure proper and safe use of aircraft it is essential for one to familiarise with engine's limitations and engine manufacturer's safety warnings. Before engine start-up make sure the area around the propeller is clear. It is recommended to start-up the engine with aircraft's nose pointing against the wind.

Make sure the fuel quantity will suffice for the planned flight duration.
Make sure the securing bolts and safety push-pins are insterted correctly at both ends of the triangle.
Engage wheel brakes.

Engine start-up

Make sure both fuel valves are open and master switch in OFF position (key full left).
Set propeller pitch to flat (prop. pitch screw to the left fully), if applicable
Should the engine be cold, apply choke (lever full back).
Set master switch ON (key in full right position). Set both magneto switches ON.
Engage engine starter and keep it engaged until the engine starts.
For two-stroke engines, set throttle to at most 3500 RPM, for four-stroke engines to 2500 RPM.
Slide the choke lever forward gradually.

CAUTION! When the engine is very cold, the engine may refuse to start. Should this occur, jerk the choke handle fully backwards and hold it there for some 20 seconds to make mixture richer.

Engine warm-up procedure

A two-stroke engine should be warmed-up at 3500 RPM, a four-stroke, however, at 2500 RPM up to the point working temperature is reached.

Warming-up the engine you should:
1 Point aircraft's nose against the wind.
2 Verify the engine temperature ranges within operational limits.

CAUTION! Avoid engine warm-up at idle throttle as this causes sparks to turn dirty and the engine to overheat.

With wheel brakes engaged and triangle in full back position, first set engine power to 3500 RPM (two-stroke engine) or 4000 RPM (four-stroke engine) in order to perform the magneto check. Set the magneto switches OFF and back ON one by one to verify RPM drop of not more than 250 RPM (two-stroke engines) or 300 RPM (four-stroke engine).
When the magneto check has been completed, add full power (throttle lever full forward) and monitor engine's RPM. Make sure they range between maximum recommended and maximum allowable RPM limits.

Note that engines do not reach 5800 RPM (6800 RPM) on ground. Engines are factory set to reach maximum ground RPM of 5300 - 5500 (6300-6500) at sea level at 20° C with propeller at minimum pitch setting. Maximum ground RPM may vary depending on the season and service elevation.

CAUTION! Should engine's RPM be lower than max. recom. RPM on ground or in excess of maximum allowable RPM on ground during this manoeuvre, check engine and wiring for correct installation.

Taxi

Stear the trike pushing right or left foot forward to stear left or right respectively. Prior to taxiing it is essential to check wheel brakes for proper braking action. To taxi faster, increase trhottle (right foot), brakes are activated only through the pedal with your left foot.

CAUTION! During taxi it is necessary to hold the triangle in your hands firmly. Should you fail to do that a sudden gust of wind may cause the triangle to escape from your grip and even overturn the powered-hangglide. Pay special attention while turning on the ground with strong winds. Whenever you taxi with wind coming from behind you, hold the triangle in full back position.

In case you expect taxiing to last, take engine warm-up time into account and begin taxiing immediately after engine start-up. Warm-up the engine during taxiing not to cause engine overheating because of prolonged ground operation.

Holding point

Make sure the temperatures at full power range within operational limits.
Make sure the safety harnesses are fastened and secured.
Power idle.

CAUTION! Should the engine start to overheat because of long taxi and holding, shut down the engine and wait for the engine temperatures drop to reasonable values. If possible, point the aircraft's nose towards the wind. This will provide radiators with airflow to cool down the engine faster.

Take-off and initial climb

Before lining-up verify the following:

Fuel quantity: sufficient
Safety harnesses: fastened
Propeller pitch: minimum - flat setting (propeller pitch knob screwed to the left fully), if applicable
Runway: clear

Now release brakes, line up and add full power.
Verify engine for sufficient RPM at full throttle (5300 - 5500 RPM).

CAUTION! Keep adding power gradually.

WARNING! Should engine RPM not reach 5300 - 5500 RPM when at full throttle, ABORT TAKE-OFF IMMEDIATELY, come to a standstill and verify that the propeller is at minimum pitch setting.

WARNING! Always take-off into the wind!

The powered-hangglider accelerates and reaches speed of rotation very fast. At approcimately 45 km/h (25 kts) push the triangle slightly forward (5 cm, 2 ") and you will become airborne. Immediately after raturn the triangle into neutral position not to have a too steep angle of attack in case of engine failure and/or to increase airspeed for a safe transition to horizontal flight.

Initial climb

When airborne, engage brakes momentarily to prevent in-flight wheel spinning.
Accelerate at full power and later maintain proper speed of climb.
Above 50 m (165 ft) reduce engine power and keep climbing at about 85% power. During climb the powered-hangglider remains completely auto-stable and does not have the tendency to drop the nose at banks less than 45°.

If you let the triangle go completely, it will stabilise in its neutral position and the speed will range at about 65 km/h (35 kts).

Remember to keep the temperatures and RPM within operational limits during this manoeuvre.

CAUTION! Reduce RPM and increase speed in order to cool the engine down if necessary.

Cruise

Some 3600-4000 RPM are necessary to maintain horizontal flight if you're flying alone, about 4500 RPM if there's two persons on board.
At these power settings the airspeed will stabilise at about 65 km/h (35 kts) if you have the powered-hangglider balanced towards the back (last hole). At middle balancing setting the trike will be faster (75 km/h, 40 kts), but you will need about 500 RPM of engine power more. At front balancing setting the strike will fly at about 85 km/h (45 kts), but be ready for another 500 RPM more.

CAUTION! At back balancing setting the neutral position of the triangle is more to the front, whereas at the front balancing setting the neutral position is more towards the back.

WARNING! Increased engine RPM is directly related to higher fuel consumption. The fuel consumtion is dependant also on the propeller picth setting at a certain speed. Larger propeller pitch, lower RPM - lower consumption the same IAS; Smaller pitch, higher RPM - higher fuel consumption.

Cruising in rough atmosphere

Should you experience wake turbulence, reduce airspeed below maneouvering speed and and continue flight

CAUTION! In rough air, reduce engine power if necessary to keep airspeed below VRA.

Turns

A turn is the basic maneneouvre to change direction of flight.

To make a shallow turn in horizontal flight gently pull backwards the hand in which direction you want the turn to be. Doing so, the trike is pulled out of the neutral position and the trike will begin to turn. After a few moments neutralise the triangle by pulling the other hand backward a well. Doing so, you will stabilise the powered-hangglider in a turn. At this point, you may release the triangle and the powered-hangglider will continue to turn in a constant shallow banked curve. To exit the turn, pull back the hand which is opposite to the direction of turn. As the flight is level again, neutralise the forces on the triangle.

CAUTION! To enter a turn only two steps are needed: the innitiaton (pull desired hand back) and establishment (pull the other hand back as well). The same goes for exiting the turn.

To make tighter turns you need higher entry airspeed. Keep in mind: "The tighter the turn, the higher the airspeed!". To accelerate use either more throttle or initiate a shallow dive.

When performing steep (tight) turn you may encoutner flying through your own wake turbulence. If this happenes, you the powered-hangglider will swing - shortly but violently. To avoid this simply make those steeper turns in a shallow climb or dive (shallow up- or down-spiral).

Landing

CAUTION! See chapter "Performance" for landing performance.

In case your powered-hangglider is equipped with the VARIO propeller, set propeller pitch to flat (full left).
Reduce throttle and fly into final approach. For the last 30 meters (100 ft) the airspeed should be 65 km/h (35 kts) if you're the single pilot or 70 km/h (38 kts) if two persons are on board. Also, if the final approach is turbulent, maintain a higher airspeed.

A couple of meters (feet) over the runway slowly release the triangle forward to shallow the angle of descent. Some 10 to 20 cm (4-10 inches) over the runway bring the powered-hangglider into horizonal flight. Conduct the actual touchdown with the main (back) wheels first. As soon as you touch down, pull the triangle into full back position to make the trike sitck to the ground and prevent eventually dangerous rebounding.

CAUTION! When descenting reduce engine power. Should you be descenting for longer periods of time at idle throttle, jerk the throttle handle once in a while to temporarily add power not to cause the spark plugs turn dirty.

Crosswind approach and roundout

CAUTION! Crosswinds prolong landing runway length (see chapter "Performance").

Perform the final approach and roundout normally (as above). As the the main (back) wheels touch the groud the trike heels heading and does not vear of course. With stonger crosswinds you may desire to pull the triangle full back a little bit higher than normally.

WARNING! Landing with crosswing you MUST always touch down with the back wheels first!

Parking

Come to a complete standstill by engaging brakes. Re-check RPM drop by switching magnetos OFF and back ON, one by one. Leave the engine running at idle RPM for a minute in order to cool it down. Set master switch and magneto switches OFF. Set propeller pitch to flat (prop. pitch knob screwed to the left fully) if applicable. Insert paracute rescue system handle's safety pin (if rescue system installed). Unfasten safety harnesses and exit the cockpit (watch for the wheel fairings!). Block the wheels and secure the pitot tube by putting on a protection cover.

Slow and pre-stall flight

The powered-hangglider typically begins to stall at airspeeds below 50 km/h (27 kts) , depending on the current weight. The powered-hangglider is constructed and built in such a manner that a pilot cannot maneuvre the aircraft into a deep stall where the aircraft would drop the nose and start to loose height rapidly.

Even if the triangle is completely pushed forward the powered-hangglider still remains flyable, but looses height relatively fast. Under such conditions the airspeed stabilises at about 45 km/h (24 kts) and the vertical sink at about 3 m/s (600 fpm). The powered-hangglider is rather unstable and the pilot should constantly correct eventual bank deviations using gentle, non sudden movements.

Should you attempt to perform pre-stall flight in a slightly banked curve you shoud know the performance is rather the same. However, at banks exceeding 20° the nose drops significantly.
With the triangle pushed completely forward and full throttle the powered-hangglider begins to climb and remains under full control authority. At banks over 40° the nose will drop significantly.

Flight in light rain

Flying in light rain degrades the performace of the wing as water dropplent accumulate on the top part of the wing (airfoil). They may cause irregular laminar characteristics and concequentially lower lift and lower ability to carry weight at the same speed. Also, take-off run will be LONGER and stall speed HIGHER.

Flying in rain may also leed to engine failure, as the water can soak the airfilters and enter the carburetor. In this case, perform an emergency landing as safely as possible.

Flight in rough air

A powered-hangglider is an aircraft with very low wing loads and low operational airspeeds. You should be aware of this every time you fly.

Special attention must be payed to speed, direction and gusts of wind. The effect of wing on the wing load is evident from the Vg diagram in chapter Performance of this manual. These values must be respected at all times! You may perform all basic maneouvres inside these limitations.

A powered-hangglider is more sensitive to wind and turbulence than a fixed wing, aerodynamically controlled aircraft. However, crosswind is not problematic as a powered-hangglider has virtually no vertical surface areas.
Your flight activity is completely safe (take-off, landings) up to this conditions:

Steady headwind:	**up to 15 km/h (9 kts)**
Steady tailwind:	**up to 10 km/h (6 kts)**
Steady crosswind:	**up to 5 km/h (3 kts)**

WARNING! Flying in gusty wind conditions is prohibited!

This page is intentionally left blank.

Performance

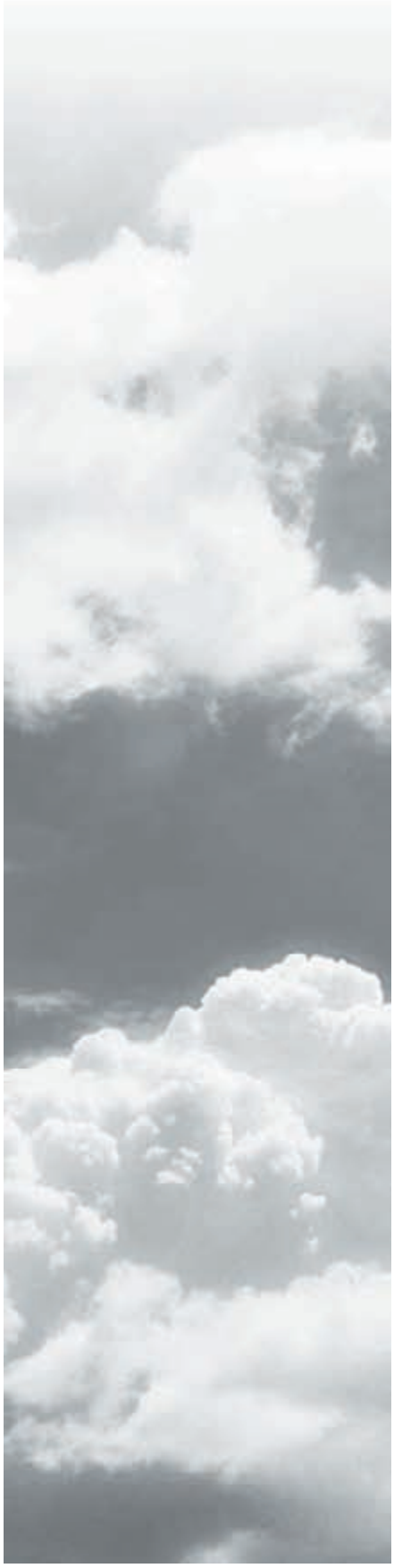

Introduction

This chapter provides information on aircraft's airspeed calibration, stall speeds and general performance. All data published was obtained from test flight analysis. Test pilots were instructed to control the plane simulating average pilot's flying skills.

Airspeed indicator calibration (IAS to CAS)

Pitot tube's ingenious mounting and construction makes IAS to CAS correction values insignificant. Therefore pilots should regard IAS to be same as CAS. **IAS = CAS.**

Stall speeds

Stall speeds at are as follows:

Configuration:	Wing HAZZARD 15	Wing HAZZARD 12
single pilot (220 kg)	40 km/h (21 kts)	42 km/h (22 kts)
two pilots (350 kg)	43 km/h (23 kts)	48 km/h (26 kts)

Take-off performance

All data published in this section was obtained under following conditions:

elevation: 100 meters (330 feet)
wind: calm
runway: dry grass runway with low-cut grass
ICAO standard atmosphere

Takeoff runway length may vary depending on the wind, temperature, elevation and wing & propeller surface condition.

TRIKE, wing HAZZARD 15	Plus	Spider	Twister
take-off run (single pilot - 220 kg)	70 m (225 ft)	65 m(210 ft)	60 m (195 ft)
landing run (two pilots - 350 kg)	90 m (305 ft)	85 m (280 ft)	82 m (270 ft)
take-off distance over 15 m (50 ft) obstacle (single pilot - 220 kg)	122 m (400 ft)	100 m (330 ft)	85 m (280 ft)
take-off distance over 15 m (50 ft) obstacle (two pilots - 350 kg)	147 m (490 ft)	135 m (440ft)	125 m (410 ft)

TRIKE, wing HAZZARD 12	Plus	Spider	Twister
take-off run (single pilot - 220 kg)	75 m (240 ft)	68 m (220 ft)	61 m (200 ft)
landing run (two pilots - 350 kg)	95 m (315 ft)	92 m (300 ft)	90 m (295 ft)
take-off distance over 15 m (50 ft) obstacle (single pilot - 220 kg)	140 m (460 ft)	125 m (410 ft)	115 m (380 ft)
take-off distance over 15 m (50 ft) obstacle (two pilots - 350 kg)	228 m (790 ft)	210 m (700 ft)	190 m (625 ft)

Effect of the wind

Wind (head, cross or downwind - also called tailwind) affects aircraft's ground speed (GS).

Headwind on takeoff and landing causes the Takeoff and Landing runway length to shorten as the GS is smaller during these two flight stages. The opposite stands for tailwind on takeoff and landing as tailwind prolongs Takeoff and Landing runway length significantly.

Headwind shortens Takeoff and Landing runway length by 8 meters (25 feet) with every 5 km/h (3 kts) of wind increase (e.g. provided there is a 10 km/h (6 kts) headwind on takeoff and landing, distances will be approximately 16 meters (50 feet) shorter then ones published in the manual).

Tailwind prolongs Takeoff and Landing runway length by 18-20 meters (60-65 feet) with every 5 km/h (3kts) wind increase (e.g. provided there is a 10 km/h (6kts) tailwind on takeoff and landing, distances will be approximately 36-40 meters (120-130 feet) longer then ones published in the manual).

WARNING! Tailwind affects takeoff and landing performance by more than twice as much as headwind does.

Climb

The table below provides data on climb performace at different weights.

TRIKE, wing HAZZARD 15	Plus	Spider	Twister
best rate of climb (single pilot - 220 kg)	4,8 m/s (960 fpm)	5.5 m/s (1100 fpm)	6,4 m/s (1280 fpm)
best rate of climb (two pilots - 350 kg)	3,9 m/s (780 fpm)	4,1 m/s (820 fpm)	3,5 m/s (700 fpm)

TRIKE, wing HAZZARD 12	Plus	Spider	Twister
best rate of climb (single pilot - 220 kg)	4,3 m/s (860 fpm)	4,9 m/s (980 fpm)	5,5 m/s (1100 fpm)
best rate of climb (two pilots - 350 kg)	3,3 m/s (660 fpm)	3,8 m/s (760 fpm)	3,1 m/s (620 fpm)

Cruise

The data in the table below are valid for a 75% cruise power (manifold pressure), at MTOM and flight at 500 m (1650 ft) MSL in standard atmospheric conditions.

TRIKE	Plus	Spider	Twister
Wing HAZZARD 15	55 km/h (29 kts)	57 km/h (30 kts)	60 km/h (32 kts)
Wing HAZZARD 12	60 km/h (32 kts)	63 km/h (34 kts)	65 km/h (35 kts)

The cruise speed is dependant on the cruising altitude, gross weight of the aircraft, propeller pitch and wing trim position.

Glide

The glide is defined as unpowered rightened flight at speed providing best lift over drag ratio or minimum sink rate.

Should the engine become inoperative in flight, as a result of either intended or unintended action, and it cannot be restarted, react as follows:

establish rightened flight at the speed providing best lift over drag ratio, if you desire to overcome greatest distance at reach from initial altitude.

establish rightened flight at speed providing minimum sink rate, if you desire do stay airborne the longest. This may come in handy in case you will be forced to give way to other aircraft or if you simply need time to determine the most appropriate site to land out on.

TRIKE	Plus	Spider	Twister
min. sink speed (H 15)	60 km/h (32 kts)	60 km/h (32 kts)	60 km/h (32 kts)
min. sink speed (H 12)	65 km/h (35 kts)	65 km/h (35 kts)	65 km/h (35 kts)
min. sink rate (H 15, 220 kg)	1,1 m/s (220 fpm)	1,1 m/s (220 fpm)	1,1 m/s (220 fpm)
min. sink rate (H 15, 350 kg)	1,5 m/s (300 fpm)	1,5 m/s (300 fpm)	1,5 m/s (300 fpm)
min. sink rate (H 12, 220 kg)	1,1 m/s (220 fpm)	1,1 m/s (220 fpm)	1,1 m/s (220 fpm)
min. sink rate (H 12, 350 kg)	1,5 m/s (300 fpm)	1,5 m/s (300 fpm)	1,5 m/s (300 fpm)
best L/D speed (H 15)	65 km/h (35 kts)	65 km/h (35 kts)	65 km/h (35 kts)
best L/D speed (H 12)	70 km/h (38 kts)	70 km/h (38 kts)	70 km/h (38 kts)

CAUTION: When the engine fails, especially in climb, the aircraft always loses some 30 meters (100 feet) of altitude before pilots manage to establish rightened unpowered flight.

Landing performance

Landing runway length may vary depending on the elevation, gross weight, touchdown velocity, wind direction and how aggressive the braking action is. With an airport elevation 100 meters (300 feet) and wind calm, the landing runs are as follows:

TRIKE, wing HAZZARD 15	Plus	Spider	Twister
landing run (single pilot - 220 kg)			50 m (115 ft)
landing run (two pilots - 350 kg)			80 m (260 ft)

TRIKE, wing HAZZARD 12	Plus	Spider	Twister
landing run (single pilot - 220 kg)			80 m (260 ft)
landing run (two pilots - 350 kg)			100 m (330 ft)

Vg diagram

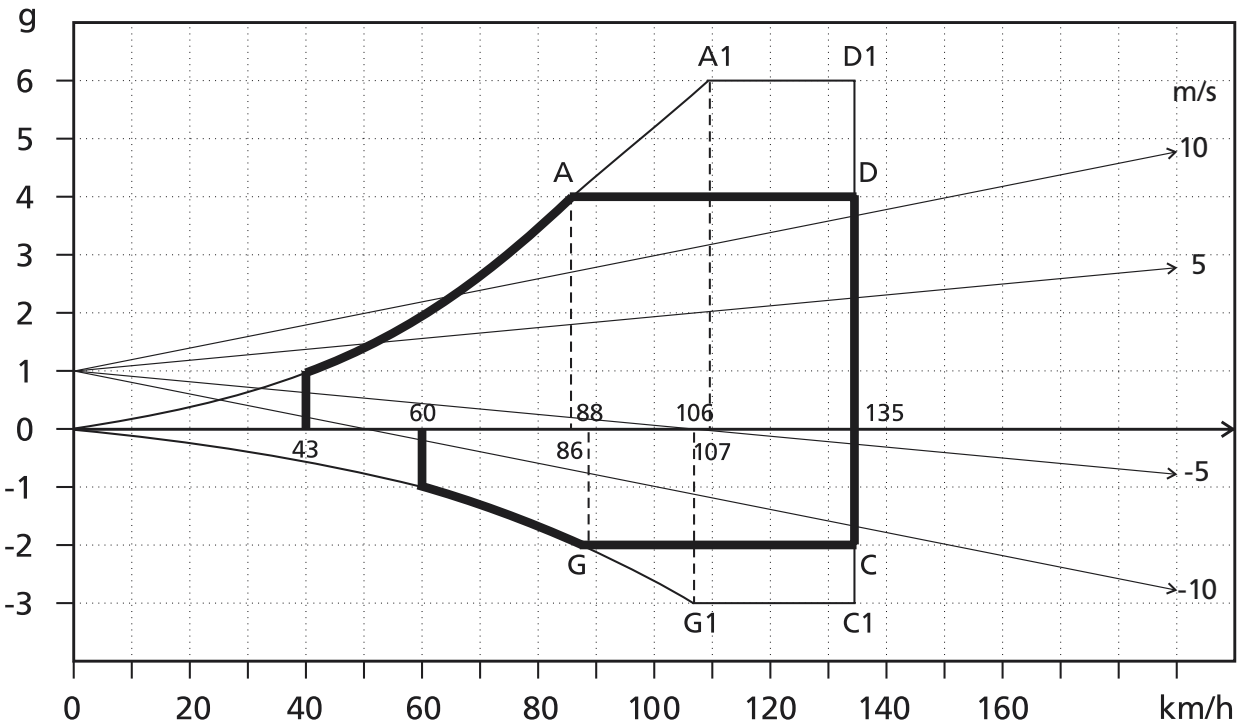

Turn load diagram

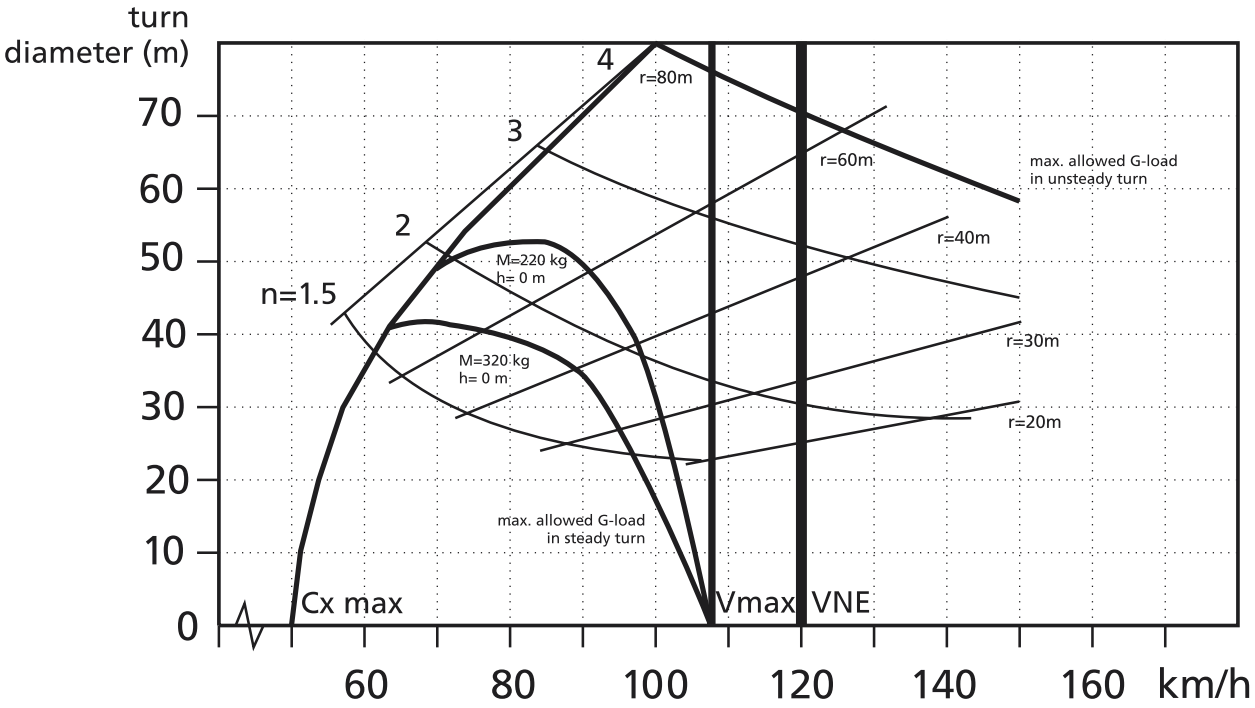

Noise levels

Noise levels are measured from the ground. The aircraft at MTOM must fly over the microphone at a height of 150 meters (500 feet), exactly at VNE, with engine power needed to maintain horizontally rightened flight. All versions of Pipistrel Trike noise levels measured in such manner have been officially assessed to be below 65 dB.

This page is intentionally left blank.

Weight and balance

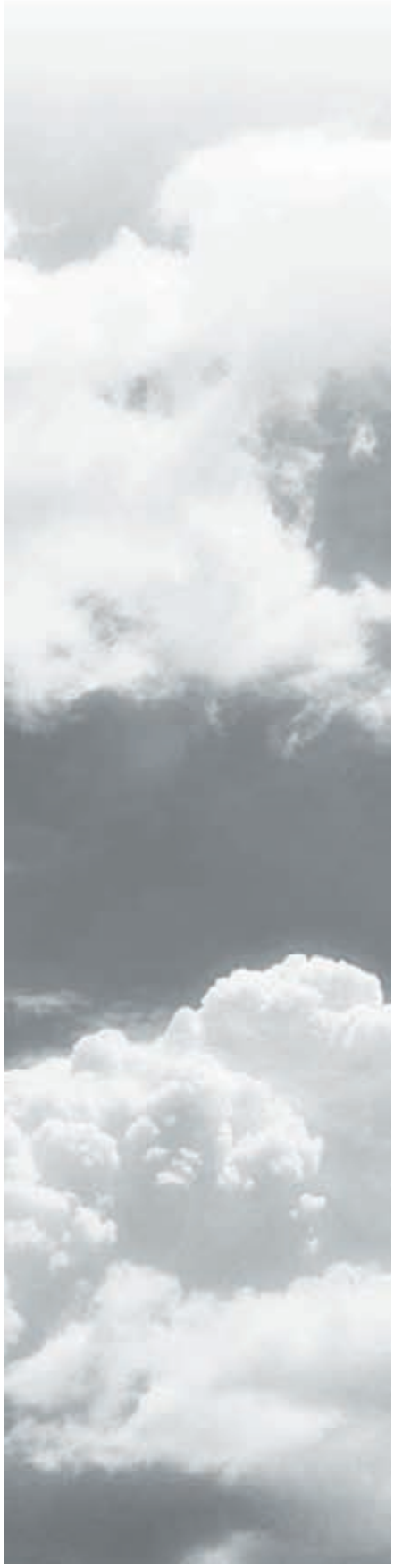

Introduction

This chapter provides information on aircraft's weight and balance, which is essential for safe flying activity.

Autostability

A powered-hangglider is an autostable aircraft. This means that the mass centre of the trike will position itself under the wing exactly in the centre of gravity of the whole aircraft. Therefore, the mass distribution on the trike itself is not of vital importance.
However, heavy objects suspended far ahead or far behing the seats may influence the position/lateral orientation of the trike in flight. This is most noticable at touch-down, where the front or back wheels touch the ground respectively.

Passengers

The second (back) seat is located at or close-to mass centre of the trike, therefore the weight of the passanger does not influence the centre of grafity. For passanger comfort there are foot rests and 4-point safety belts mounted on the trike.

CAUTION! Should a large person be sitting on the passanger seat the pilots workspace may become hindered at his elbows. Before take-off, make sure the pilot can operate the triangle without obstructions.

Luggage

Should you be flying alone, you may use the back seat as your baggage space. Should there also be a passanger on board and you still desire to carry luggage (pay attention to the MTOW), you may attach the luggage to the frame or the trike under the passanger's seat, which would be close to the mass centre of the trike.

WARNING! When mounting luggage onto the trike make sure you do not obstruct the parachute rescue system's area of operation.

WARNING! Do not, under any circumstances exceet the maximum take-off weight (MTOW) of 350 kg.

Should you desire do have baggage compartment attached to the frame do so at an authorised service centre. Welding onto the frame of the trike is prohibited!

Pay special attention about the packing of the luggage. Do everything to prevent parts of the luggage to fly through the propeller or separate from the luggage bulk in any way. The same goes for all equipment attached to yourself - sunglasses caught by the airflow may damage the propeller to much you will be forced to shut down the engine and perform an emergency landing.

CAUTION! Before each take-off verify how the luggage is attached to the trike. Make sure it cannot fall off and thereby damage the propeller.

Trim procedure

Trim procedure is performed to adjust the neutral point of the control bar (triangle) more to the front or more to the back.

Trim (lateral axis)

Trimming along the lateral axis is possible only on the ground. It involves moving the attachment joint between the wing and the trike. This will change the airspeed at which the trike will fly when you release the triangle at a certain power setting. Trimming has no influence on the centre of gravity of the aircraft whatsoever.
Note, the more forward the attachment joint is positioned, the higher the speed will be in horizontal flight; the more backward the attachment joint is positioned, the lower the speed will be in horizontal flight.

Trim (vertical axis)

If your powered-hangglider does not fly straight forward when you release the triangle, but rather begins to drift of course, you should know this can be corrected. First check that wing is not ripped or has some other damage, which could influence airflow around it.
If the wing is perfectly fine, begin the trim procedure along aircraft's vertical axis. To do this simply curve the three (3) outher-most ribs of the wing on the side the aircraft is drifting to.

CAUTION! Do not, under any circumstances bend the outer-most ribs more than 10 mm at once!

WARNING! In case the aircraft still drifts off course after having bend the outer-most three (3) ribs for more 50 mm, you must have your wing inspected by the manufacturer.

This page is intentionally left blank.

Aircraft and systems on board

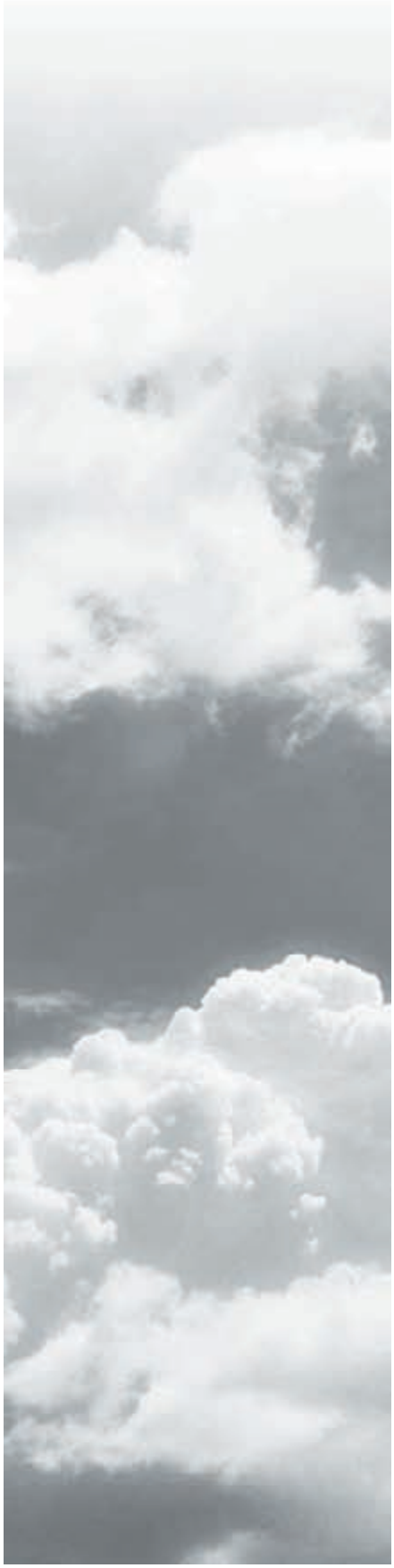

Introduction

The Pipistrel PLUS is the lightest model for beginners. With the popular Rotax engine 503 and ground adjustable composite 2-blade propeller (3-blade option) its the best compromise between price and flying characteristics. The kit version includes all cables, tubes, screws, and everything you need to complete the aircraft.

The Pipistrel SPIDER Is the most popular Pipistrel trike. With all wheel fairing, larger front wheel and stronger brake its very serviceable specially on wet or soft ground. It includes electric starter, 3-point seat belts, running light and parking brake. For better flight comfort it mount a 4-blade ground adjustable composite low noise propeller and gear ratio 1:4,00 on Rotax 582. The BRS, GRS, USH and PARADELTA rescue systems are easy to mount on predisposed support.

With 4-stroke Rotax 912 UL powerful engine, strong and soft composite profiled landing gear and full version options, Twister is the best on trike market you may choose. With propeller PIPISTREL VARIO (variable pitch in the air) like option, and with a fast wing it became a real formula 1 trike.

Composite/plastic parts:

Fabric:	92110, 92120, 91125
Roving:	NF24
Foam:	75 kg/m3 PVC 3mm, PVC 5 mm, PVC 8mm
GFK:	thickness 3 mm
Paint:	gelcoat

All composite parts are made of glass, carbon and kevlar fiber manufactured by Interglas GmbH.

Metal parts:

Tubes:	Fe1430, CR41
Sheet metal:	Fe0147
Pushrods:	CR41
Wire ropes:	AISI 316
Bolts and nuts:	stainless steel grade 8/8

All parts and materials presented in Pipistrel Trikes are also being used in glider and general aviation industry and all comply with aviation standards.

Control levers

Throttle and brake levers (pedals) are located on the front wheel fork. Throttle is on the right, wheel brake pedal on the left. Just in front of the seats are hand throttle lever (if applicable), choke lever, VARIO propeller knob (if applicable) and parachute rescue system activation handle (if applicable)

Instruments

The trikes are equipped with two different instrument panel types. The small, rectangular type which houses only the basic instruments and switches and the larger, bubble-aerodynamic shaped instrument panel with room for more instruments and switches.

Both versions come with a magnetic compass, magneto switches, master switch and starter button.

Undercarriage

Undercarriage is a tricycle with stearable nose wheel

Razmak glavnih koles:	1,40 m
Dimenzije gum:	4,00'' x 8'' (main wh.) 4.00'' x 6'' (front wh.)
Tlak v pneumatikah:	1,0 - 1,2 kg/cm^2
brakes:	drum or disk type
brake fluid:	DOT 3 or DOT 4

Seats and safety belts

Seating configuration is raised tandem. Seats are without stiff soles and are attached to the metal frame with velcro tapes. They can be easily removed and washed if desired and/or necessary. Seat belts are 3 point H-type with quick release mechanism.

Power plant and propeller

Trikes may be equipped with various three engines.

Engine types:

Engine:	**ROTAX 503 (two-stroke inline, two cylinders, 497 cm³)** twin carburated - double electronic ignition
cooling:	fan cooling
lubrication:	by adding oil into fuel or using an independent oil pump
reduction gearbox:	Rotax type "B" or "C"
reduction ratio:	1 : 2,58 or 1: 2,62 (1:3 optional)
el. generator output power:	170 W at 6000 RPM
starter:	electric
engine power:	45 (49) HP at 6600 RPM
battery:	12 V, 8 Ah

Engine:	**ROTAX 582 (two-stroke inline, two cylinders, 580 cm³)** twin carburated - double electronic ignition
cooling:	water cooling, own radiator and water pump
lubrication:	by adding oil into fuel or using an independent oil inject. pump
reduction gearbox:	Rotax type "B" or "C"
reduction ratio:	1 : 2,58 or 1: 2,62 (1:3 optional)
el. generator output power:	170 W at 6000 RPM
starter:	electric
engine power:	64 HP at 6600 RPM
battery:	12 V, 8 Ah

Engine:	**ROTAX 912UL (4-stroke boxer, four cylinders, 1211 cm³)** twin carburated - double electronic ignition
cooling:	housing aircooled, cylinder heads watercooled - own radiator and pump, other moving parts oilcooled - own radiator and pump
lubrication:	centrally oiled - own oil pump and radiator
reduction gearbox:	integrated
reduction ratio:	1 : 2,27
el. generator output power:	250 W at 5500 RPM
starter:	electric
engine power:	80 HP at 5500 RPM
battery:	12 V, 8 Ah

All metal ropes used are fire resistant, kept inside metal, self-lubricating flexible tubes.

Propeller types:

propeller Pipistrel BAM:	3- or 4-blade, fixed pitch composite propeller - diameter 1660 mm
propeller Pipistrel LN:	3- or 4-blade, fixed pitch composite propeller - diameter 1660 mm
propeller Pipistrel VARIO :	twin blade, variable pitch composite propeller - diameter 1620 mm

VARIO propeller

A variable pitch propeller significantly increases aircraft's takeoff, cruise and glider performance.

CAUTION! Always fly in such a manner that you are able to reach at least one landing-out site every moment of the flight. This especially applies to unpowered flight as ignition, engine and/or propeller malfunction may prevent you from restarting the engine and by that resuming normal flight.

decreasing propeller pitch **increasing propeller pitch**

The screw in the middle of the knob indicates propeller pitch status. The screw is deep inside the knob when at minimum pitch and slides out as propeller pitch is increased.

When taking-off, always make sure propeller is set to minimum pitch to ensure maximum engine efficiency. To set the propeller to minimum pitch, screw the propeller pitch knob located on the instrument panel counter clockwise completely. Prior to taking-off, engine and propeller ground check must be performed. At full power and propeller pitch at minimum, RPM must not exceed designated limits. Verify also, that the RPM drop significantly when setting propeller pitch to maximum setting (knob screwed to the right fully, but not feathered!). When returning propeller pitch back to minimum setting, the RPM must reach same initial value as before engine and propeller ground check!

CAUTION! Verify RPM and engine parameters multiple times.

If propeller pitch is increased (rotate knob clockwise), engine's RPM will drop. Do not, under any circumstances, allow engine underrotation. Should this occur, immediately decrease prop. pitch to regain proper engine cruise parameters.

WARNING! Both engine under- and overrotation may cause significant damage to the engine and propeller.

Propeller feathering

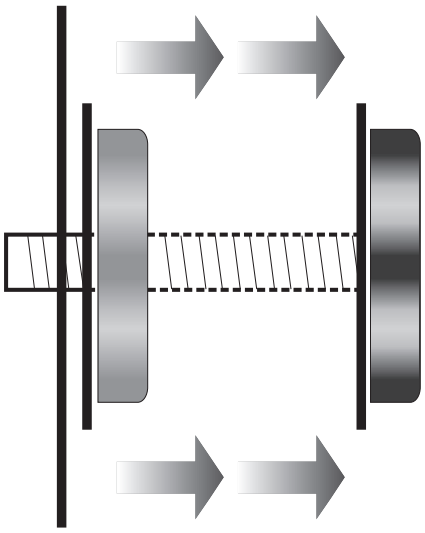

1. propeller feathering

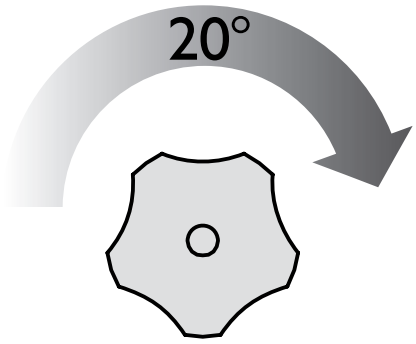

2. secure feathered position

WARNING! Feather propeller only after the engine has stopped and at minimum pitch.

To feather the propeller, first reduce airspeed to 90 km/h (50 kts), then pull the propeller pitch knob's metal base backwards fully and then rotate it 20° clockwise. A propeller pitch of approximately 70° is reached by doing so. To feather the propeller fully (90°), rotate the knob clockwise a couple of times until it stops.

Propeller unfeathering

To unfeather the propeller, first reduce airspeed to 90 km/h (50 kts) and screw the propeller pitch knob to the left fully. Then pull the propeller pitch knob's metal base slightly, rotate it counter clockwise for 20° and gently push it all the way to the instrument panel.

WARNING! Do not, under any circumstances, attempt to restart the engine while the propeller is feathered. This would most definitely result in engine, propeller and/or aircraft's structural damage.

Fuel system

description:	vented wing fuel tanks with refuling aperture on top
fuel capacity:	43 liters
unusable fuel:	2 liters

All fuel hoses are protected with certified glass-teflon cover. Plus's and Spider's fuel system are without fuel return circuit. Model 912's (Twister) fuel system features fuel return circuit.

Schematic on next side shows how the fuel feed to the engine is done.

Schematic fuel feed to the engine

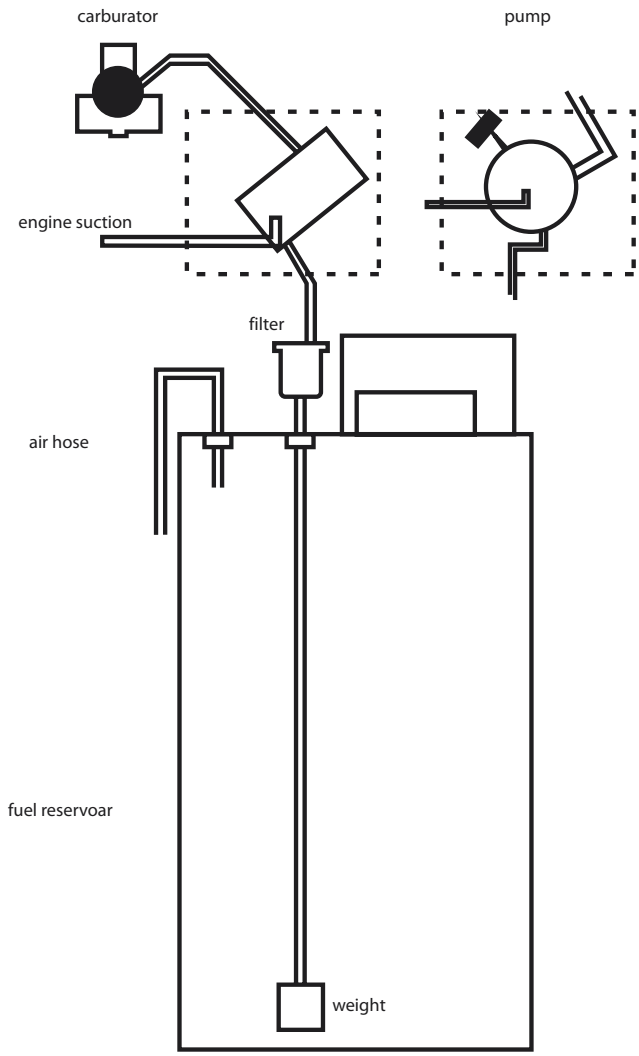

Electrical system

description:	Double separated magneto ignition. Standard, 12 V circuit charges the battery and provides power to all appliances and instruments.
master switch:	key type
magneto switches:	separated for each magneto
other switches:	fused and equipped with control lights
battery:	12 V, 8 Ah or 5 Ah
Measured power comsumpiton of some circuit brakers:	Landing light: 4.5 A, Nav/Strobe lights: 1 (steady) - 2 (peak) A , Cockpit light: 0.5 A, Radio & Transponder: Please consult item's operating manual

Schematic electrical system (manual pulley starter)

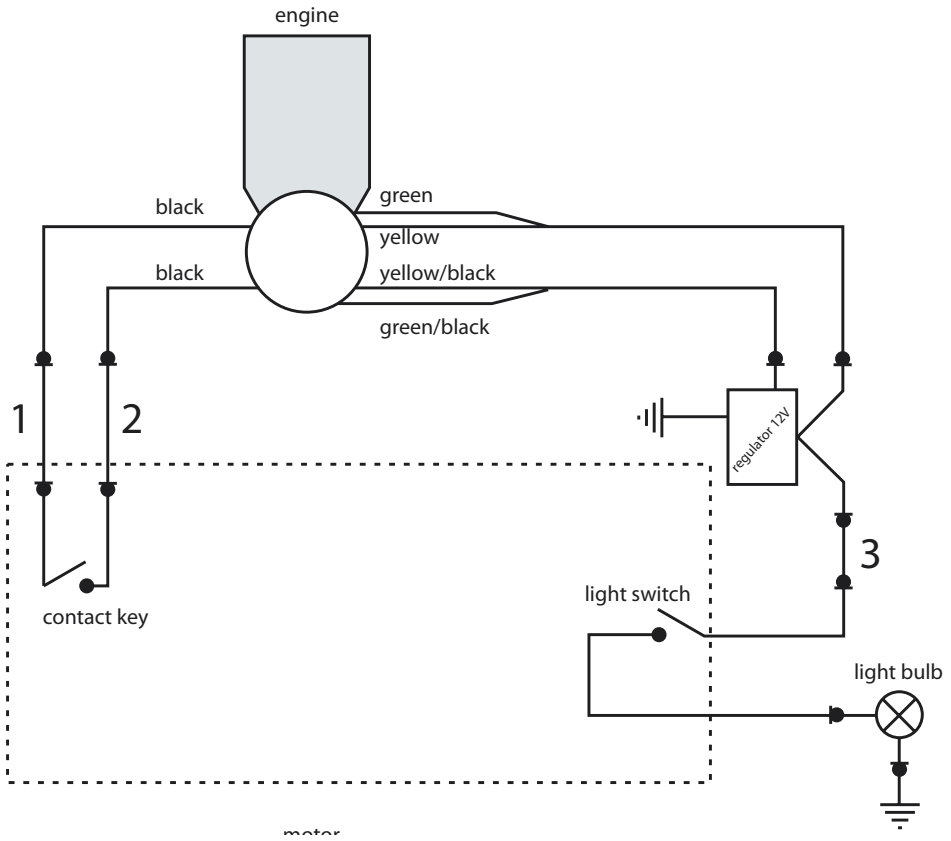

Schematic electrical system (electrical starter)

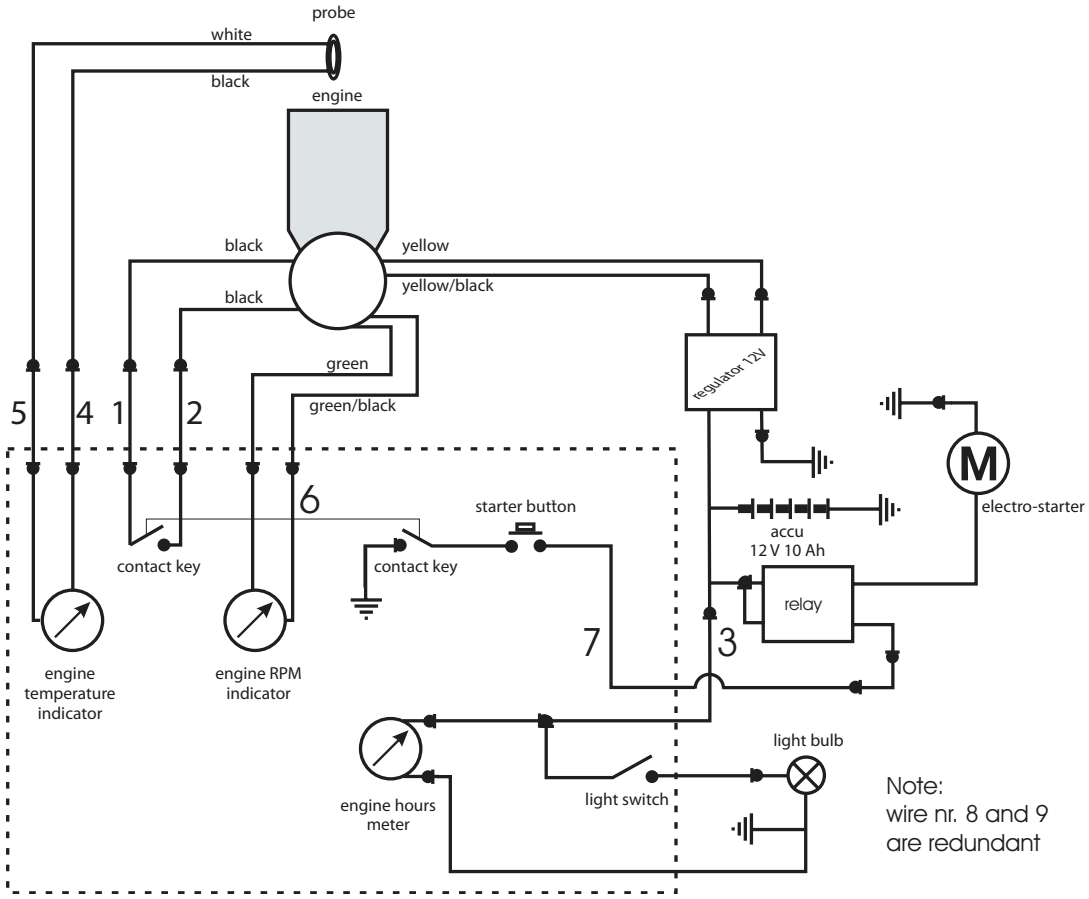

Schematic electrical system (electrical starter & instruments)

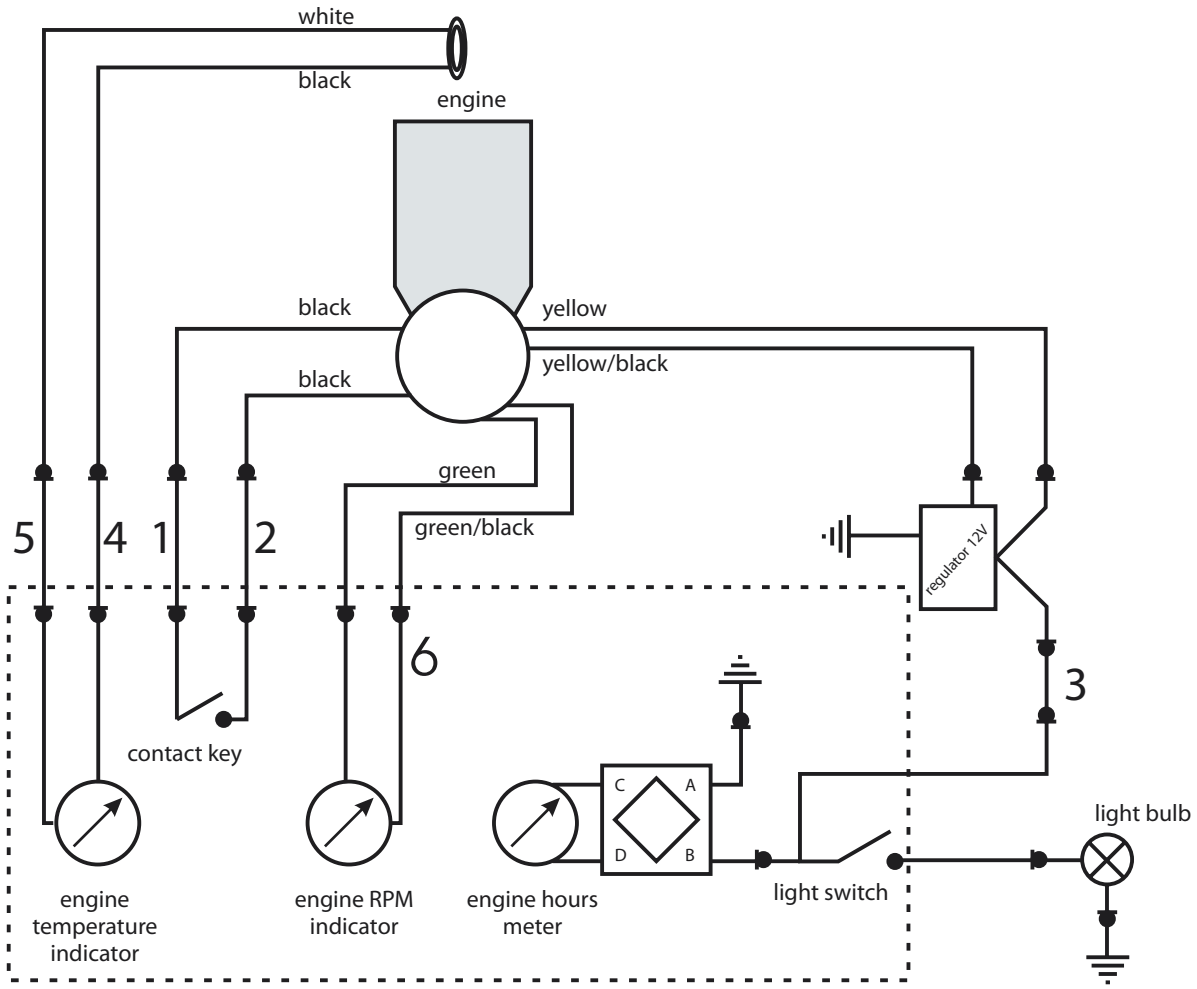

Engine cooling system

Rotax 503 cooling system

The Rotax 503 engine is aircooled by use of own fan. Cold air enters through the opening on the top engine cover and is forced to spread over the engine fins. The air then blown out of the engine compartment just below the firewall.

Rotax 582 cooling system

The Rotax 582 engine is watercooled. The cooling fluid circulates through the hoses via twin cooling circuit. For that an integrated pump is used. When the engine is still cold (cold start), the thermostat allows for the fluid to circulate around the cylinders only. Later, when the engine warms-up the thermostat switches cooling mode and the cooling fluid passes through the radiator as well.
The whole system is pressurised with a pressure valve located on top of the radiator. The overflow tank fluid level must always be inside designated limits!
The manufacturer recommends use of cooling fluids used in car industry diluted in such a manner that it withstands temperatures as low as - 20° C.

Rotax 912 cooling system

The Rotax 912 engine's cylinders are watercooled. The cooling-air intake is located on the right-hand bottom part of the engine cover.
Cylinder heads are watercooled. Own water pump forces water through the radiator, placed behind the air intake opening on the top engine cover. The engine does not feature a thermostat valve. The system is pressurised with a pressurised valve placed on one of the hoses. The overflow tank fluid level must always be inside the designated limits!
The engine does not offer cooling water temp. monitoring. Only CHT is displayed in the cockpit. The engine does not feature a cooling fan, therefore cooling it is entirely dependant on moving air currents and airspeed.

CAUTION! You are strongly discouraged from leaving the engine running at idle power when on ground.

The manufacturer recommends use of cooling fluids used in car industry diluted in such a manner that it withstands temperatures as low as - 20°C.

Schematic of engine cooling system - model 582

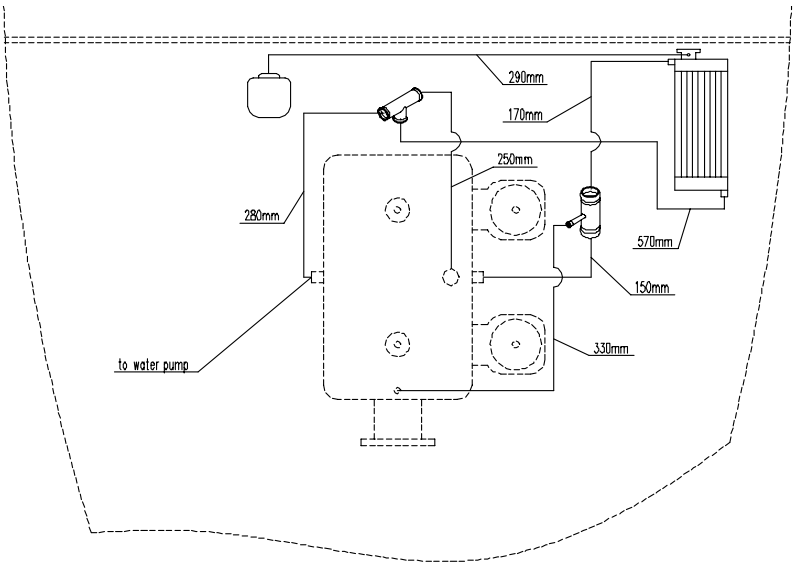

Schematic of engine cooling system - model 912

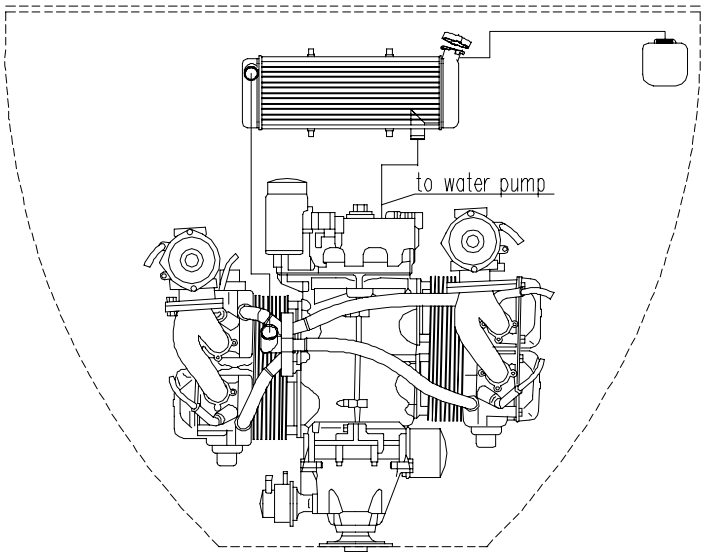

Engine lubrication system

Rotax 503 and 582 are two-stroke engines and are adequately lubricated by oil/fuel mixture. Proper lubrication is ensured by adding 2% of syntetic of semi-syntetic oil into the fuel canister. However, both Rotax 503 and 582 may optionally be equipped with an oil injection pump. Should your aircraft be equipped with such a pump, refuel the aircraft with pure gasoline and add oil into a separate container (see chapter "Limitations" for recommended oils)

Rotax 912 is a four-stroke engine, equipped with a dry carter and lubricated centrally with use of own oil pump. All the oil needed is located inside an outer canister. When the engine is running, the oil cools itself passing through a radiator, located on the left-hand side of the bottom engine cover. Oil quantity can be checked visually with a oil level bar. Make sure the oil quantity is sufficient limits at all times.

CAUTION! Oil temperature, pressure and quality is strictly defined an must not, under any circumstances, vary from its safe values.

Schematic of engine lubrication system - model 912

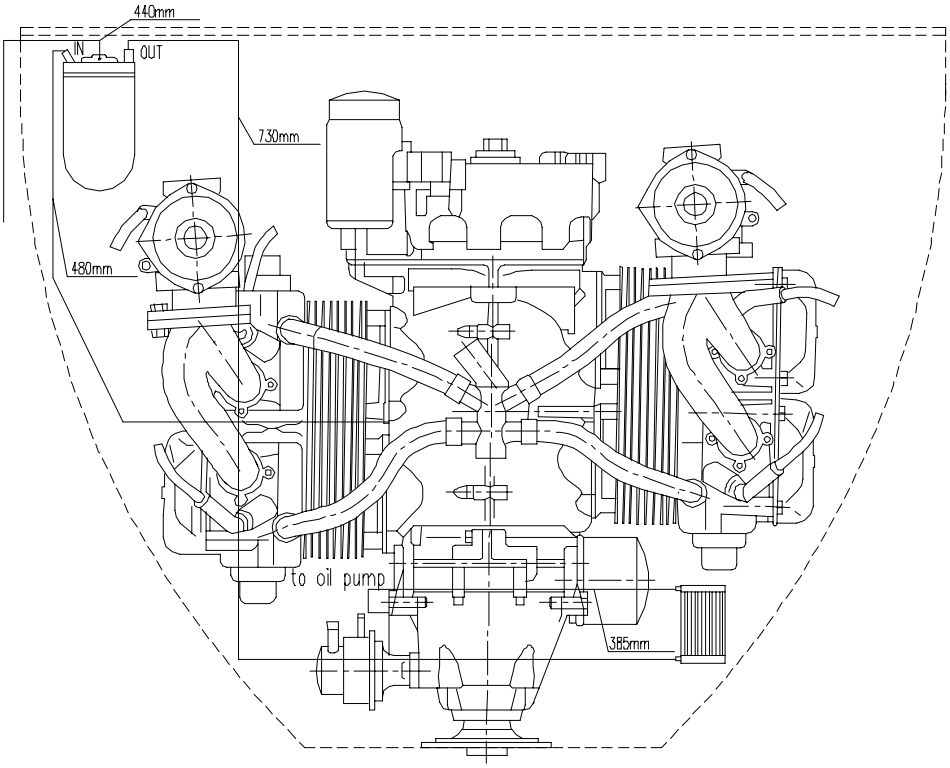

Wheel brake system

Wheel brake system features seperate braking action for each of the front landing gear. Wheel brakes are drum or disc, wire driven (old type) or hydraulic type (new type).
Wheel brake levers is operated by pressing the on top-left pedal lever.

Hydraulic brake fluid used for hydraulic type brakes is DOT 3 or DOT 4.

To learn how to vent hydraulic brakes' lining please see page 70 of this manual.
If the braking action on your aircraft is poor whilst the fully depressed wheel levers, please see page 71 of this manual to learn how to rectify this problem.

This page is intentionally left blank.

Handling and maintenance

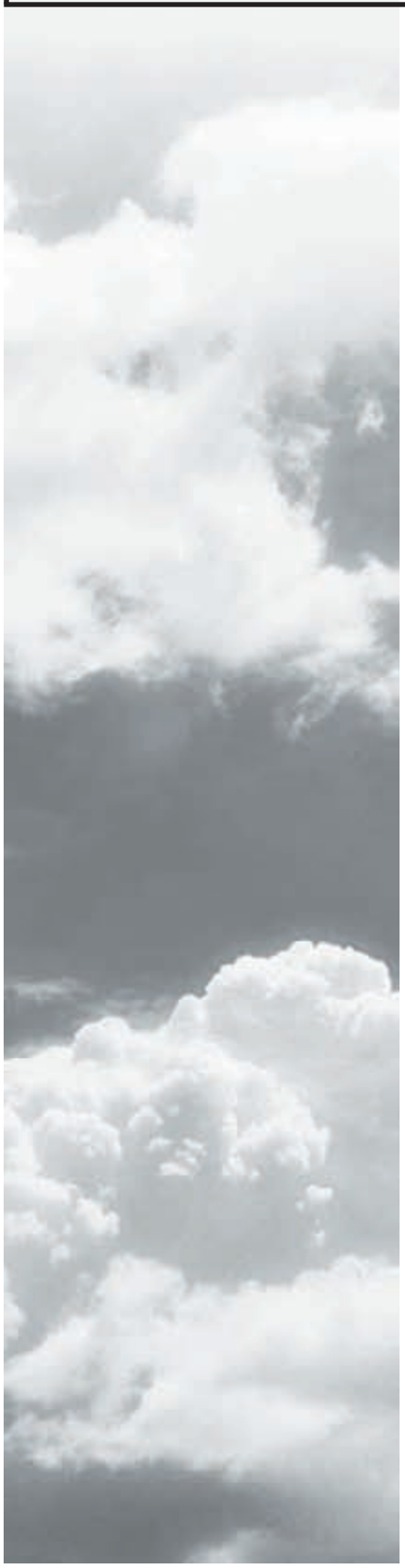

Introduction

This chapter determines handling and (preventative) maintenance terms. Also, recommended ground handling is presented.

Repairs, spare part replacements and preventative maintenance

All major repairs and spare part replacements MUST be done by authorised service personnel.

However, you are encouraged to take care of preventative maintenance yourself. This includes: **tire and wheel bearings replacements, safety wire replacements, safety harness replacement, light bulb replacements, fuel hose replacements, battery servicing and replacement, sparks and spark plugs replacements and air filter replacements.**

The table below indicates recommended maintenance periods:

Table legend:

- **C** **Check-up** - visual only, check for free play and whether everything is in position - **DO IT YOURSELF**
- **CL** **Cleaning - DO IT YOURSELF**
- **LO** **Lubricating, oiling** - lubricate all designated parts and spots using proper lubricant - **DO IT YOURSELF**
- **R** **Replacement -** replace designated parts regardless of state and condition. You are encouraged to **DO** undemanding replacements **YOURSELF**, otherwise have replacements done by **AUTHORISED SERVICE PERSONNEL**
- **SR** **Mandatory Replacement by AUTHORISED SERVICE PERSONNEL**
- **C/R** **Check and Replace if necessary**
- **SC** **Special check-up** - measuring, verifying tolerances and functionality - **DONE BY AUTHORISED SERVICE PERSONNEL ONLY**
- **O** **Overhaul**

	daily	first 5 hours	15 hours	50 hours	100 hours	200 hours	500 hours
TRIKE							SC
alluminium tubes (d.70mm)	C			C		C/R	
steel tubes	C			C		C	
engine mount	C			C			
engine mount shock absorber rubbers	C				C	R	
shock absorber rubbet at wing attach.	C		C		SR		
oil level in shock absorbers					C	SR	
tyres	C				C/R		R
wheel bearings				C	LO		
wheel axis					C		
welds	C						
bolts	C				C/R		

	daily	first 5 hours	15 hours	50 hours	100 hours	200 hours	500 hours
hole roundness					C/R		
diagonal spar junction bolt (below seat)	C			C/R		SR	
safety belts	C				C/R		
throttle bowden/cable	C		CL				R
wheel brake				C	C/R		
front wheel fork Main bolt	C				C/R	SR	
comb joint on upper strut					C		
safety pins and locks	C						
manual starter pulley				C			
fuel reservoir and system lines	C			CL			
fuel filter	C			R			

AFTER EACH REPAIR SECURE THE NUTS AND BOLTS AND LOG THE REPAIR INTO ACFT LOGBOOK

	daily	first 5 hours	15 hours	50 hours	100 hours	200 hours	500 hours
ENGINE							SC
see enclosed Rotax engine manual for detailed engine maintenance information.							
In addition to Rotax manual:							
two-stroke engines (overhaul every 300 hours)			C				
four-stroke engines (overhaul every 1.200 hours)				C			
carburetor filter (air)			C,CL				
carburetor jets, piston, spring (see Rotax MM)							
electrical system, junctions, master switch	C					C/R	
reduction gearbox oil (see Rotax MM)							
propeller attachment bolts				C	R		
engine mount bolts	C					R	
exhaust system shock absorber	C				C/R	R	
exhaust system springs	C					R	
exhaust system (see Rotax MM)							
spark plugs (see Rotax MM)							
ignition coils (see Rotax MM)							
pre-ignition (see Rotax MM)							
platinum pads (see Rotax MM)							
vacuum pump membrane (see Rotax MM)							
decarbonisation of piston and cyl. head (see Rotax MM)							
cylinder head o-ring (see Rotax MM)							
manual starter rope (see Rotax MM)							
cooling fan belt-drive (see Rotax MM)							
carburetor rubber flange (see Rotax MM)							
high-voltage ignition cables and caps (see Rotax MM)							

WARNING! AFTER EACH SERVICE OPERATION SECURE NUTS AND BOLTS AND FASTEN THEM WITH EXACT TORQUE PERSCRIBED BY ROTAX! ALWAYS USE CORRECT FUEL MIXTURE AND WARM-UP THE ENGINE BEFORE TAKEOFF!

	daily	first 5 hours	15 hours	50 hours	100 hours	200 hours	500 hours
HAZZARD WING							SC
main longitudinal tube					C		
side middle tubes					C		
main wing spar (tube)					C		
ribs (symetry check)			C				
swivels					C/R		
triangle and pyramid tubes					C/R		
fabric					CL		
fabric stitching					C		
bottom wire ropes	C					C/R	
upper wire ropes	C					C/R	
bolts					C		
push-pins	C				LO	R	
bolt of wing-trike joint	C				R		
rib safety rope-loops	C					R	
joints tube-tube	C						
joints tube-rope	C						
top of pyramid (wire rope joints)				C		C/R	
holes roundness					C/R		
wire ropes (length check on template)						C/R	
ribs (shape check on template)				C			

WARNING! AFTER EACH EVENTUAL DAMAGE IT IS MANDATORY TO REPLACE THE BENT TUBES AND VERIFY FOR THE CORRECT LENGTH OF WIRE ROPES ON THE TEMPLATE. VERIFY ALSO ALL THE CRITICAL BOLTS FOR PERFECT CONDITION!

Special check-ups

After having exceeded VNE or landed in a rough manner:

check the undercarriage and wing surfaces and main spars for abnormalities. It is highly recommended to have the aircraft verified for airworthiness by authorised service personnel.

Draining and refuelling

Whenever draining or refuelling make sure master switch is set to OFF (key in full left position).

Refuelling

CAUTION! Before refuelling it is necessary to ground the aircraft!

Refuelling can be done by pouring fuel through the reservoir openings on top of the reservoir.

CAUTION! Use authorised plastic canisters to transport and store fuel only! Metal canisters cause for water to condensate on the inside, which may later result in engine failure.

Connecting Auxilliary power supplies

Should you be unable to start the engine due to a weak battery, auxilliary power supplies can be connected to help starting the engine.
Connect the cables directly to the battery. Make sure you do not mix up the polarity. After you have connected the wires correctly, start the engine normally by pressing the starter button on the dashboard.

WARNING! The pilot must be in cockpit when starting the engine. The person who will disconnect the cables after the engine has started must be aware of the danger of spinning propeller nearby.

Tie down

Head the aircraft away from the wind and block all three wheels or engage the parking brake.
Secure tie-down ropes around the front tube of the undercarriage and ground it just below. At the end, cover the pitot tube with a protection cover.

Storage

The aircraft is ideally stored in a hangar. For increased in-hangar manouvrability use of original push-cart is recommended.
If a parachute rescue system is installed in your aircraft, make sure the activation handle safety pin is inserted every time you leave the aircraft.
Also, disconnect the battery from the circuit to prevent battery self-discharge during storage period.
You may also desire to fold the wing and store it at a dry space.

CAUTION! Should the aircraft be stored and/or operated in areas with high atmospheric humidity pay special attention to eventual corrosion of metal parts, especially inside the wings. Under such circumstances it is necessery to replace the spoilers' (airbrakes') connector rod every 2 years.

Cleaning

Use pure water and a soft piece of cloth to clean the aircraft's exterior and the wing. If you are unable to remove certain spots, consider using mild detergents. Afterwards, rinse the entire surface thoroughly. To protect the aircraft's metal surfaces from the environmental contaminants, use best affordable car wax. The seats can be removed and washed or cleaned with a vacuum cleaner.

This page is intentionally left blank.

Appendix

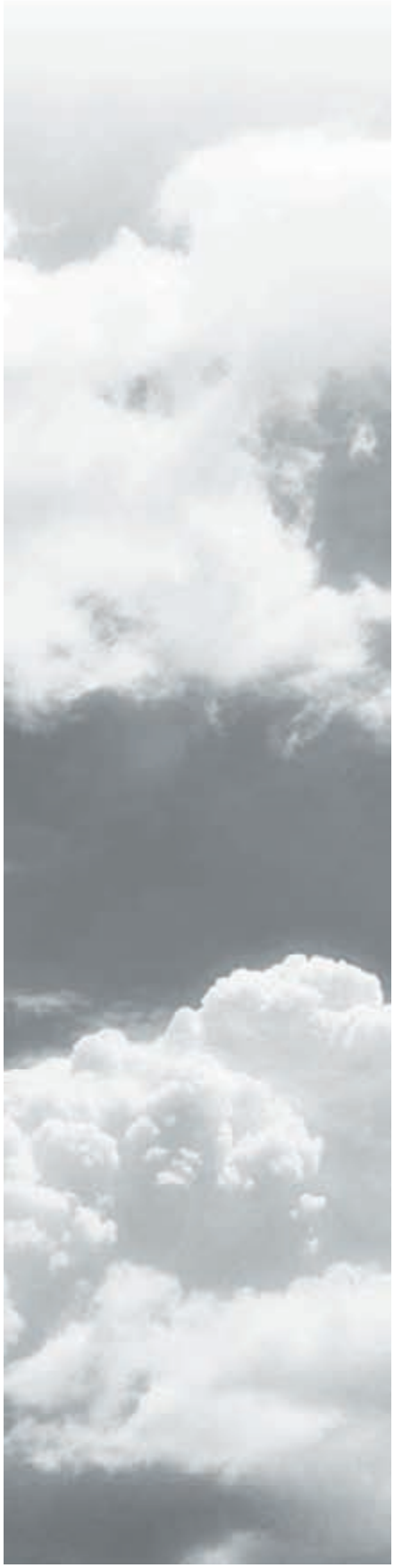

Parachute rescue system: use, handling and maintenance

Conversion tables

Parachute rescue system: use, handling and maintenance

System description

The GRS rocket charged parachute rescue system provides you with a chance to rescue yourself and the aircraft regardless of the height, velocity and nose attitude.
The system is placed inside a durable cylinder mounted on the right hand side of the baggage compartment. Inside this cylinder is the parachute which stored inside a deployment bag with a rocket engine underneath.
Its brand new design presents a canopy that is not gradually frown from the container, exposed to distortion by air currents, but it is safely open after 0,4 to 0,7 seconds in distance of 15-18 metres above the aircraft. It is fired there in a special deployment bag, which decreases the risk of aircraft debris breaching the canopy.
The parachute rescue system is activated manually, by pulling the activation handle mounted on the back wall above. After being fired, the man canopy is open and fully inflated within 3,2 seconds.

WARNING! Activation handle safety pin should be inserted when the aircraft is parked or hangared to prevent accidental deployment. However, the instant pilot boards the aircraft, safety pin MUST be removed!

Use of parachute rescue system

In situations such as:

- structural failure
- mid-air collision
- loss of control over aircraft
- engine failure over hostile terrain
- pilot incapacitation (incl. heart attack, stroke, temp. blindness, disorientation...)

the parachute MUST be deployed. Prior to firing the system:

- shut down the engine and set master switch to OFF (key in full left position)
- shut both fuel valves
- fasten safety harnesses tightly
- protect your face and body.

To deploy the parachute pull the activation handle hard for a length of at least 30 cm.

Once you have pulled the handle and the rocked is deployed, it will be less than two seconds before you feel the impact produced by two forces. The first force is produced by stretching of all the system. The force follows after the inflation of the canopy from opening impact and it will seem to you that the aircraft is pulled backwards briefly. The airspeed is reduced instantly and the aircraft now starts do descent to the ground underneath the canopy.

As a pilot you should know that the phase following parachute deployment may be a great unknown and a great adventure for the crew. You will be getting into situation for the first time, where a proper landing and the determination of the landing site are out of your control.

CAUTION! Should you end up in power lines (carrying electrical current), DO NOT under any circumstances touch any metal parts. This also applies to anyone attempting to help or rescue you. Be aware that anyone touching a metal part while standing on the ground will probably suffer mayor injury or die of electrocution. Therefore, you are strongly encouraged to confine your movements until qualified personal arrives at the site to assist you.

After the parachute rescue system has been used or if you suspect any possible damage to the system, do not hesitate and immediately contact the manufacturer!

Handling and maintenance

Prior to every flight all visible parts of the system must be checked for proper condition. Special attention should be paid to eventual corrosion on the activation handle inside the cockpit. Also, main fastening straps on the outside of the fuselage must undamaged at all times.
Furthermore, the neither system, nor any of its parts should be exposed to moisture, vibration and UV radiation for long periods of time to ensure proper system operation and life.

CAUTION! It is strongly recommenced to thoroughly inspect and grease the activation handle, preferably using silicon oil spray, every 50 flight hours.

All major repairs and damage repairs MUST be done by the manufacturer or authorised service personnel.

For all details concerning the GRS rescue system, please see the "GRS - Galaxy Rescue System Manual for Assembly and Use".

Conversion tables

kilometers per hour (km/h) - knots (kts) - metres per sec. (m/s)

km/h	kts	m/s	km/h	kts	m/s	km/h	kts	m/s
1,853	1	0,37	63,00	34	18,34	124,16	67	36,15
3,706	2	1,07	64,86	35	18,88	126,01	68	36,69
5,560	3	1,61	66,71	36	19,42	127,87	69	37,23
7,413	4	2,15	68,56	37	19,96	129,72	70	37,77
9,266	5	2,69	70,42	38	20,50	131,57	71	38,31
11,11	6	3,23	72,27	39	21,04	133,43	72	38,86
12,97	7	3,77	74,12	40	21,58	135,28	73	39,39
14,82	8	4,31	75,98	41	22,12	137,13	74	39,93
16,67	9	4,85	77,83	42	22,66	198,99	75	40,47
18,53	10	5,39	79,68	43	23,20	140,84	76	41,01
20,38	11	5,93	81,54	44	23,74	142,69	77	41,54
22,23	12	6,47	83,39	45	24,28	144,55	78	42,08
24,09	13	7,01	85,24	46	24,82	146,40	79	42,62
25,94	14	7,55	87,10	47	25,36	148,25	80	43,16
27,79	15	8,09	88,95	48	25,90	150,10	51	43,70
29,65	16	8,63	90,80	49	26,44	151,96	82	44,24
31,50	17	9,17	92,66	50	26,98	153,81	83	44,78
33,35	18	9,71	94,51	51	27,52	155,66	84	45,32
35,21	19	10,25	96,36	52	28,05	157,52	85	45,86
37,06	20	10,79	98,22	53	28,59	159,37	86	46,40
38,91	21	11,33	100,07	54	29,13	161,22	87	46,94
40,77	22	11,81	101,92	55	29,67	163.08	88	47,48
42,62	23	12,41	103,77	56	30,21	164,93	89	48,02
44,47	24	12,95	105,63	57	30,75	166,78	90	48,56
46,33	25	13,49	107,48	58	31,29	168,64	91	49,10
48,18	26	14,03	109,33	59	31,83	170,49	92	49,64
50,03	27	14,56	111,19	60	32,37	172,34	93	50,18
51,80	28	15,10	113,04	61	32,91	174,20	94	50,12
53,74	29	15,64	114,89	62	33,45	176,05	95	51,26
55,59	30	16,18	116,75	63	33,99	177,90	96	51,80
57,44	31	16,72	118,60	64	34,53	179,76	97	52,34
59,30	32	17,26	120,45	65	35,07	181,61	98	52,88
61,15	33	17,80	122,31	66	35,61	183,46	99	53,42

knots (kts) - metres per second (m/s)

	0	1	2	3	4	5	6	7	8	9
0	0	0,51	1,02	1,54	2,05	2,57	3.08	3,60	4,11	4,63
10	0,51	5,65	6,17	6,66	7,20	7,71	8,23	8,74	9,26	9,77
20	10,28	10,80	11,31	11,83	12,34	12,86	13,37	13,89	14,40	14,91
30	25,43	15,94	16,46	16,97	17,49	18,00	18,52	19,03	19,54	20,06
40	20,57	21,09	21,60	22,12	22,63	23,15	23,66	24,17	24,69	25,20
50	25,72	26,23	26,75	27,26	27,76	28,29	28,80	29,32	29,83	30,35
60	30,86	31,38	31,89	32,41	32,92	33,43	33,95	34,46	34,98	35,49
70	36,00	36,52	37,04	37,55	38,06	38,58	39,09	39,61	40,12	40,64
80	41,15	41,67	42,18	42,69	43,21	43,72	44,24	44,75	45,27	45,78
90	46,30	46,81	47,32	47,84	48,35	48,87	49,38	49,90	50,41	50,90

metres per second (m/s) - feet per minute (100 ft/min)

m/sec.		100 ft/min	m/sec.		100 ft/min	m/sec.		100 ft/min
0,50	1	1,96	10,66	21	41,33	20,82	41	80,70
1,01	2	3,93	11,17	22	43,30	21,33	42	82,67
1,52	3	5,90	11,68	23	45,27	21,84	43	84,64
2,03	4	7,87	12,19	24	47,24	22,35	44	86,61
2,54	5	9,84	12,75	25	49,21	22,86	45	88,58
3,04	6	11,81	13,20	26	51,18	23,36	46	90,53
3,55	7	13,78	13,71	27	53,15	23,87	47	92,52
4,06	8	15,74	14,22	28	55,11	24,38	48	94,48
4,57	9	17,71	14,73	29	57,08	24,89	49	96,45
5,08	10	19,68	15,24	30	59,05	25,45	50	98,42
5,58	11	21,65	15,74	31	61,02	25,90	51	100,4
6.09	12	23,62	16,25	32	62,92	26,41	52	102,3
6,60	13	25,51	16.76	33	64,96	26,92	53	104,3
7,11	14	27,55	17,27	34	66,92	27,43	54	106,2
7,62	15	29,52	17,78	35	68,89	27,94	55	108,2
8,12	16	31,49	18,28	36	70,86	28,44	56	110,2
8,63	17	33,46	18,79	37	72,83	28,95	57	112,2
9,14	18	35,43	19,30	38	74,80	29,46	58	114,1
9,65	19	37,40	19,81	39	76,77	29,97	59	116,1
10,16	20	39,37	20,32	40	78,74	30,48	60	118,1

ICAN (international comitee for air navigation) temperatures, relative pressure, relative density and CAS to TAS correction factors as related to altitude

Altitude		Temperature		Relative pressure	Relative density	Cor. factors
feet	metres	°C	°F			
-2.000	-610	18,96	66,13	1,074	1,059	0,971
-1	-305	16,98	62,56	1,036	1,029	0,985
0	0	15	59	1	1	1
1.000	305	13,01	55,43	0,964	0,971	1,014
2.000	610	11,03	51,86	0,929	0,942	1,029
3.000	914	9,056	48,30	0,896	0,915	1,045
4.000	1219	7,075	44,73	0,863	0,888	1,061
5.000	1524	5,094	41,16	0,832	0,861	1,077
6.000	1829	3,113	37,60	0,801	0,835	1,090
1.000	2134	1,132	34,03	0,771	0,810	1,110
8.000	2438	-0,850	30,47	0,742	0,785	1,128
9.000	2743	-2,831	26,90	0,714	0,761	1,145
10.000	3090	-4,812	23,33	0,687	0,738	1,163
11.000	3353	-6,793	19,77	0,661	0,715	1,182
12.000	3658	-8,774	16,20	0,635	0,693	1,201
13.000	3916	-10,75	12,64	0,611	0,671	1,220
14.000	4267	-12,73	9,074	0,587	0,649	1,240
15.000	4572	-14,71	5,507	0,564	0,629	1,260
16.000	4877	-16,69	1,941	0,541	0,608	1,281
17.000	5182	-18,68	-1,625	0,520	0,589	1,302

metres (m) to feet (ft) conversion table

metres (m)		feet (ft)	metres (m)		feet (ft)	metres (m)		feet (ft)
0,304	1	3,280	10,36	34	111,5	20,42	67	219,81
0,609	2	6,562	10,66	35	114,8	20,72	68	223,09
0,914	3	9,843	10,97	36	118,1	21,03	69	226,37
1,219	4	13,12	11,27	37	121,3	21,33	70	229,65
1,524	5	16,40	11,58	38	124,6	21,64	71	232,94
1,828	6	19,68	11,88	39	127,9	21,91	72	236,22
2,133	7	22,96	12,19	40	131,2	22,25	73	239,50
2,438	8	26,24	12,49	41	134,5	22,55	74	242,78
2,743	9	29,52	12,80	42	137,7	22,86	75	246,06
3,048	10	32,80	13,10	43	141,1	23,16	76	249,34
3,352	11	36,08	13,41	44	144,3	23,46	77	252,62
3,657	12	39,37	13,71	45	147,6	23,77	78	255,90
3,962	13	42,65	14,02	46	150,9	24,07	79	259,18
4,267	14	45,93	14,32	47	154,1	24,38	80	262,46
4,572	15	49,21	14,63	48	157,4	24,68	81	265,74
4,876	16	52,49	14,93	49	160,7	24,99	82	269,02
5,181	17	55,77	15,24	50	164,1	25,29	83	272,31
5,48	18	59,05	15,54	51	167,3	25,60	84	275,59
5,791	19	62,33	15,84	52	170,6	25,90	85	278,87
6,096	20	65,61	16,15	53	173,8	26,21	86	282,15
6,400	21	68,89	16,45	54	177,1	26,51	87	285,43
6,705	22	72,17	16,76	55	180,4	26,82	88	288,71
7,010	23	75,45	17,06	56	183,7	27,12	89	291,99
7,310	24	78,74	17,37	57	187,0	27,43	90	295,27
7,620	25	82,02	17,67	58	190,2	27,73	91	298,55
7,948	26	85,30	17,98	59	193,5	28,04	92	301,83
8,220	27	88,58	18,28	60	196,8	28,34	93	305,11
8,530	28	91,86	18,59	61	200,1	28,65	94	308,39
8,830	29	95,14	18,89	62	203,4	28,90	95	311,68
9,144	30	98,42	19,20	63	206,6	29,26	96	314,96
9,448	31	101,7	19,50	64	209,9	29,56	97	318,24
9,750	32	104,9	19,81	65	213,2	29,87	98	321,52
10,05	33	108,2	20,12	66	216,5	30,17	99	324,80

air pressure as related to altitude

altitude (m)	pressure (hPa)	pressure (inch Hg)	altitude (m)	pressure (hPa)	pressure (inch Hg)
-1000	1139,3	33,6	1300	866,5	25,6
-950	1132,8	33,5	1350	861,2	25,4
-900	1126,2	33,3	1400	855,9	25,3
-850	1119,7	33,1	1450	850,7	25,1
-800	1113,2	32,9	1500	845,5	25,0
-750	1106,7	32,7	1550	840,3	24,8
-700	1100,3	32,5	1600	835,2	24,7
-650	1093,8	32,3	1650	830	24,5
-600	1087,5	32,1	1700	824,9	24,4
-550	1081,1	31,9	1750	819,9	24,2
-500	1074,3	31,7	1800	814,8	24,1
-450	1068,5	31,6	1850	809,8	23,9
-400	1062,3	31,4	1900	804,8	23,8
-350	1056,0	31,2	1950	799,8	23,6
-300	1049,8	31,0	2000	794,9	23,5
-250	1043,7	30,8	2050	790,0	23,3
-200	1037,5	30,6	2100	785,1	23,2
-150	1031,4	30,5	2150	780,2	23,0
-100	1025,3	30,3	2200	775,3	22,9
-50	1019,3	30,1	2250	770,5	22,8
0	1013,3	29,9	2300	165,7	22,6
50	1007,3	29,7	2350	760,9	22,5
100	1001,3	29,6	2400	756,2	22,3
150	995,4	29,4	2450	751,4	22,2
200	989,4	29,2	2500	746,7	22,1
250	983,6	29,0	2550	742,1	21,9
300	977,7	28,9	2600	737,4	21,8
350	971,9	28,7	2650	732,8	21,6
400	966,1	28,5	2700	728,2	21,5
450	960,3	28,4	2750	723,6	21,4
500	954,6	28,2	2800	719	21,2
550	948,9	28,0	2850	714,5	21,1
600	943,2	27,9	2900	709,9	21,0
650	937,5	27,7	2950	705,5	20,8
700	931,9	27,5	3000	701,0	20,7
750	926,3	27,4	3050	696,5	20,6
800	920,0	27,2	3100	692,1	20,4
850	915,2	27,0	3150	687,7	20,3
900	909,0	26,9	3200	683,3	20,2
950	904,2	26,7	3250	679,0	20,1
1000	898,7	26,5	3300	674,6	19,9
1050	893,3	26,4	3350	670,3	19,8

ICAO standard atmosphere

h (m)	h (ft)	T (°C)	T (°K)	T/T_0	p (mmHg)	p (kg/m^2)	p/p_0	r (kgs^2/m^4)	g (kg/m^4)	d	1/S d	V_s	$n*10^6$ (m^2/s)
-1000	-3281	21,5	294,5	1,022	854,6	11619	1,124	0,137	1,347	1,099	0,957	344,2	13,4
-900	-2953	20,8	293,8	1,020	844,7	11484	1,111	0,136	1,335	1,089	0,958	343,9	13,5
-800	-2625	20,2	293,2	1,018	835	11351	1,098	0,134	1,322	1,079	0,962	343,5	13,6
-700	-2297	19,5	292,5	1,015	825,3	11220	1,085	0,133	1,310	1,069	0,967	343,1	13,7
-600	-1969	18,9	291,9	1,013	815,7	11090	1,073	0,132	1,297	1,058	0,971	342,7	13,8
-500	-1640	18,2	291,2	1,011	806,2	10960	1,060	0,131	1,285	1,048	0,976	342,4	13,9
400	-1312	17,6	290,6	1,009	796,8	10832	1,048	0,129	1,273	1,039	0,981	342	14,0
300	-984	16,9	289,9	1,006	787,4	10705	1,036	0,128	1,261	1,029	0,985	341,6	14,1
200	-656	16,3	289,3	1,004	779,2	10580	1,024	0,127	1,249	1,019	0,990	341,2	14,3
100	-328	15,6	288,6	1,002	769,1	10455	1,011	0,126	1,237	1,009	0,995	340,9	14,4
0	0	15	288	1	760	10332	1	0,125	1,225	1	1	340,5	14,5
100	328	14,3	287,3	0,997	751,0	10210	0,988	0,123	1,213	0,990	1,004	340,1	14,6
200	656	13,7	286,7	0,995	742,2	10089	0,976	0,122	1,202	0,980	1,009	339,7	14,7
300	984	13,0	286,0	0,993	133,4	9970	0,964	0,121	-1,191	0,971	1,014	339,3	14,8
400	1312	12,4	285,4	0,991	724,6	9852	0,953	0,120	1,179	0,962	1,019	338,9	14,9
500	1640	11,1	284,7	0,988	716,0	9734	0,942	0,119	1,167	0,952	1,024	338,5	15,1
600	1969	11,1	284,1	0,986	707,4	9617	0,930	0,117	1,156	0,943	1,029	338,1	15,2
700	2297	10,4	283,4	0,984	699,0	9503	0,919	0,116	1,145	0,934	1,034	337,8	15,3
800	2625	9,8	282,8	0,981	690,6	9389	0,908	0,115	1,134	0,925	1,039	337,4	15,4
900	2953	9,1	282,1	0,979	682,3	9276	0,897	0,114	1,123	0,916	1,044	337	15,5
1000	3281	8,5	281,5	0,977	674,1	9165	0,887	0,113	1,112	0,907	1,049	336,6	15,7
1100	3609	7,8	280,8	0,975	665,9	9053	0,876	0,112	1,101	0,898	1,055	336,2	15,8
1200	3937	7,2	280,2	0,972	657,9	8944	0,865	0,111	1,090	0,889	1,060	335,8	15,9
1300	4265	6,5	279,5	0,970	649,9	8835	0,855	0,110	1,079	0,880	1,065	335,4	16,0
1400	4593	5,9	278,9	0,968	642,0	8728	0,844	0,109	1,069	0,872	1,070	335	16,2
1500	4921	5,2	278,2	0,966	634,2	8621	0,834	0,107	1,058	0,863	1,076	334,7	16,3
1600	5249	4,6	277,6	0,963	626,4	8516	0,824	0,106	1,048	0,855	1,081	334,3	16,4
1700	5577	3,9	276,9	0,961	618,7	8412	0,814	0,106	1,037	0,846	1,086	333,9	16,6
1800	5905	3,3	276,3	0,959	611,2	8309	0,804	0,104	1,027	0,838	1,092	333,5	16,7
1900	6234	2,6	275,6	0,957	603,7	8207	0,794	0,103	1,017	0,829	1,097	333,1	16,9
2000	6562	2	275	0,954	596,2	8106	0,784	0,102	1,006	0,821	1,103	332,7	17,0
2100	6890	1,3	274,3	0,952	588,8	8005	0,774	0,101	0,996	0,813	1,108	332,3	17,1
2200	7218	0,7	273,7	0,950	581,5	7906	0,765	0,100	0,986	0,805	1,114	331,9	17,3
2300	7546	0,0	273,0	0,948	574,3	7808	0,755	0,099	0,976	0,797	1,120	331,5	17,4
2400	7874	-0,6	272,4	0,945	576,2	7710	0,746	0,098	0,967	0,789	1,125	331,1	17,6
2500	8202	-1,2	271,7	0,943	560,1	7614	0,736	0,097	0,957	0,781	1,131	330,7	17,7
2600	8530	-1,9	271,1	0,941	553,1	7519	0,727	0,096	0,947	0,773	1,137	330,3	17,9
2700	8858	-2,5	270,4	0,939	546,1	7425	0,718	0,095	0,937	0,765	1,143	329,9	18,0
2800	9186	-3,2	269,8	0,936	539,3	7332	0,709	0,094	0,928	0,757	1,149	329,6	18,2
2900	9514	-3,8	269,1	0,934	532,5	7239	0,700	0,093	0,918	0,749	1,154	329,2	18,3

This page is intentionally left blank.

Warranty statement

Warranty applies to individual parts and components only.
The warranty does not include costs related to the transport of the product, goods and spare parts as well as costs related to the merchandise' temporary storage. Pipistrel d.o.o. does not offer guarantee for the damage caused by every day use of the product or goods. Pipistrel d.o.o. does not guarantee for the lost profit or other financial or non-financial damage to the client, objects or third party individuals .

Warranty voids:

- in case that the customer has not ratified the General Terms of ownership with his/her signature;

- in case the aircraft or the equipment is not used according to the Pipistrel d.o.o.'s instructions or aircraft's manual and eventual supplemental sheets;

- in case when the original additional and/or spare parts are replaced with non-original parts;

- in case additional equipment is built-in without Pipistrel d.o.o.'s prior knowledge;

- in case the purchased goods were changed or modified in any way;

- in case when the defect is caused by user's deficient maintenance, inappropriate care and/or cleaning, user's negligent handling, user's inexperience, due to use of product and/or its individual parts or components in inadequate conditions, due to prolonged use of the product or goods, due to product and/or parts' over-stressing (even for a short duration), due to the fact a repair was not carried out neither by Pipistrel d.o.o. nor by its authorised personnel;

- in case parts that become worn out by every day use (e.g. the covers, pneumatics, electric instruments, electric installation, bonds and bindings, cables, brake plates, capacitors, cooling devices, various pipes, spark-plugs, exhaust systems…)

- the owner must ensure regular engine check-outs and maintenance. Some maintenance works that are demanded by the engine manufacturer must be carried out at Rotax's authorised service centres.

In case the written above is not fulfilled, warranty voids.

Pipistrel d.o.o. Ajdovščina
podjetje za alternativno letalstvo
Goriška cesta 50a
SI-5270 Ajdovščina
Slovenia

tel: +386 (0)5 3663 873
fax: +386 (0)5 3661 263
e-mail: pipistrel@siol.net

www.pipistrel.si